THIS DRAWING AND SPECIFICATIONS HEREIN ARE THE PROPERTY OF DATA GENERAL CORPORATION AND SHALL NOT BE REPRODUCED OR COPIED OR USED IN WHOLE OR IN PART AS THE BASIS FOR MANUFACTURE OR SALE OF ITEMS WITHOUT WRITTEN PERMISSION.

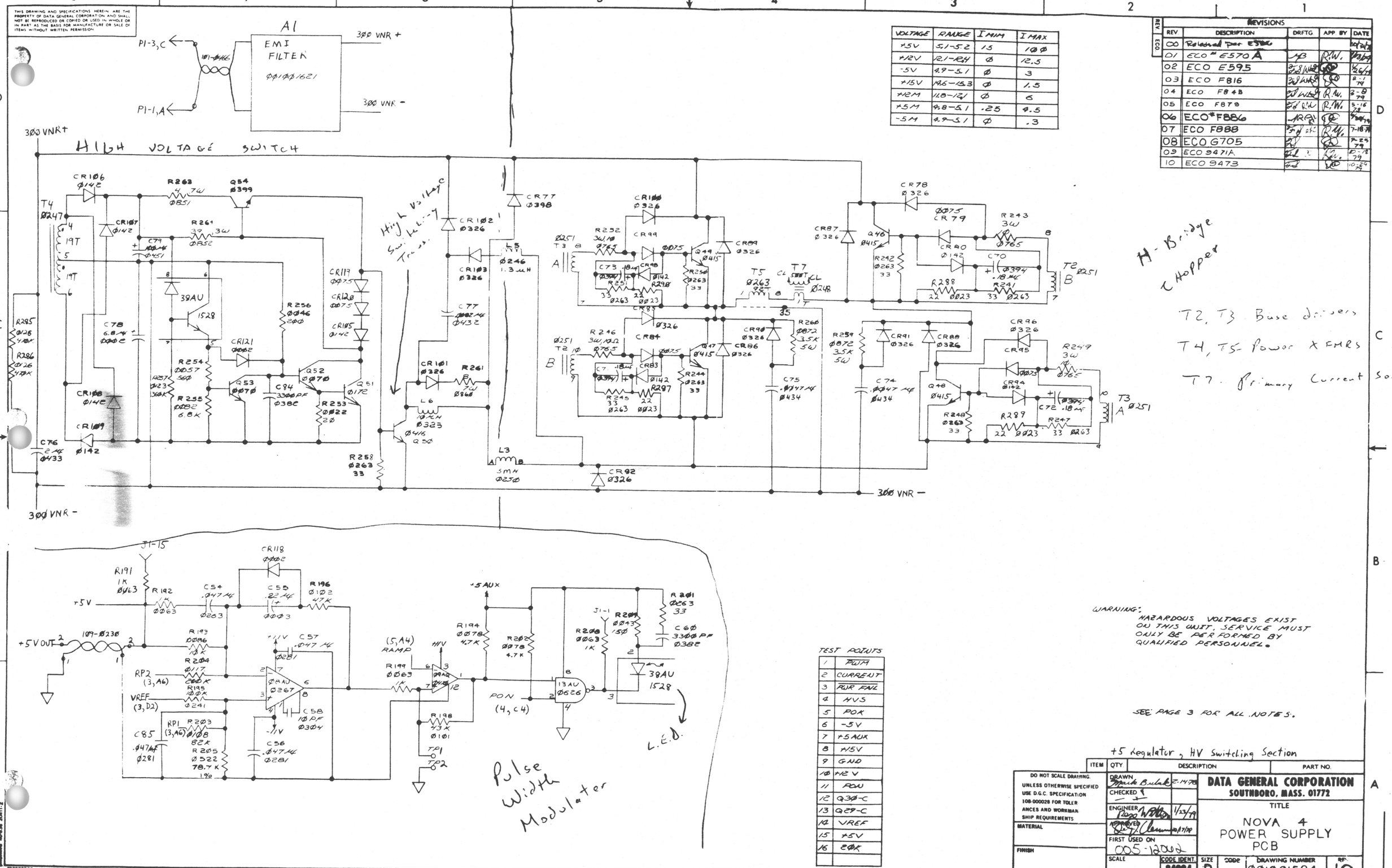

VOLTAGE	RANGE	I MIN	I MAX
+5V	5.1-5.2	1.5	100
+12V	12.1-12.4	0	12.5
-5V	4.9-5.1	0	3
+15V	14.6-15.3	0	1.5
+12M	11.8-12.1	0	6
+5M	4.8-5.1	.25	4.5
-5M	4.9-5.1	0	.3

REVISIONS

REV	DESCRIPTION	DRFTG	APP BY	DATE
00	Released per ESR			
01	ECO # E570A			
02	ECO E595			
03	ECO F816			
04	ECO F848			
05	ECO F878			
06	ECO* F886			
07	ECO F888			
08	ECO G705			
09	ECO 9471A			
10	ECO 9473			

TEST POINTS

1	PWM
2	CURRENT
3	PWR FAIL
4	HVS
5	POK
6	-5V
7	+5AUX
8	+15V
9	GND
10	+12 V
11	PON
12	Q30-C
13	Q29-C
14	VREF
15	+5V
16	20K

WARNING:
HAZARDOUS VOLTAGES EXIST ON THIS UNIT. SERVICE MUST ONLY BE PERFORMED BY QUALIFIED PERSONNEL.

SEE PAGE 3 FOR ALL NOTES.

ITEM	QTY	DESCRIPTION	PART NO.

DO NOT SCALE DRAWING. UNLESS OTHERWISE SPECIFIED USE D.G.C. SPECIFICATION 108-000028 FOR TOLERANCES AND WORKMANSHIP REQUIREMENTS

MATERIAL

FINISH

DRAWN Mark Bulak 2-14-79
CHECKED
ENGINEER 1/23/79
APPROVED 1/17/79
FIRST USED ON 005-12062

DATA GENERAL CORPORATION
SOUTHBORO, MASS. 01772

TITLE
NOVA 4
POWER SUPPLY
PCB

SCALE | CODE IDENT. 34984 | SIZE D | CODE | DRAWING NUMBER 001001524 | REV 10

SHEET 1 OF 8

THIS DRAWING AND SPECIFICATIONS, HEREIN, ARE THE PROPERTY OF DATA GENERAL CORPORATION AND SHALL NOT BE REPRODUCED OR COPIED OR USED IN WHOLE OR IN PART AS THE BASIS FOR MANUFACTURE OR SALE OF ITEMS WITHOUT WRITTEN PERMISSION

REVISIONS				
REV	DESCRIPTION	DRFTG	APP BY	DATE
REV	ECR			

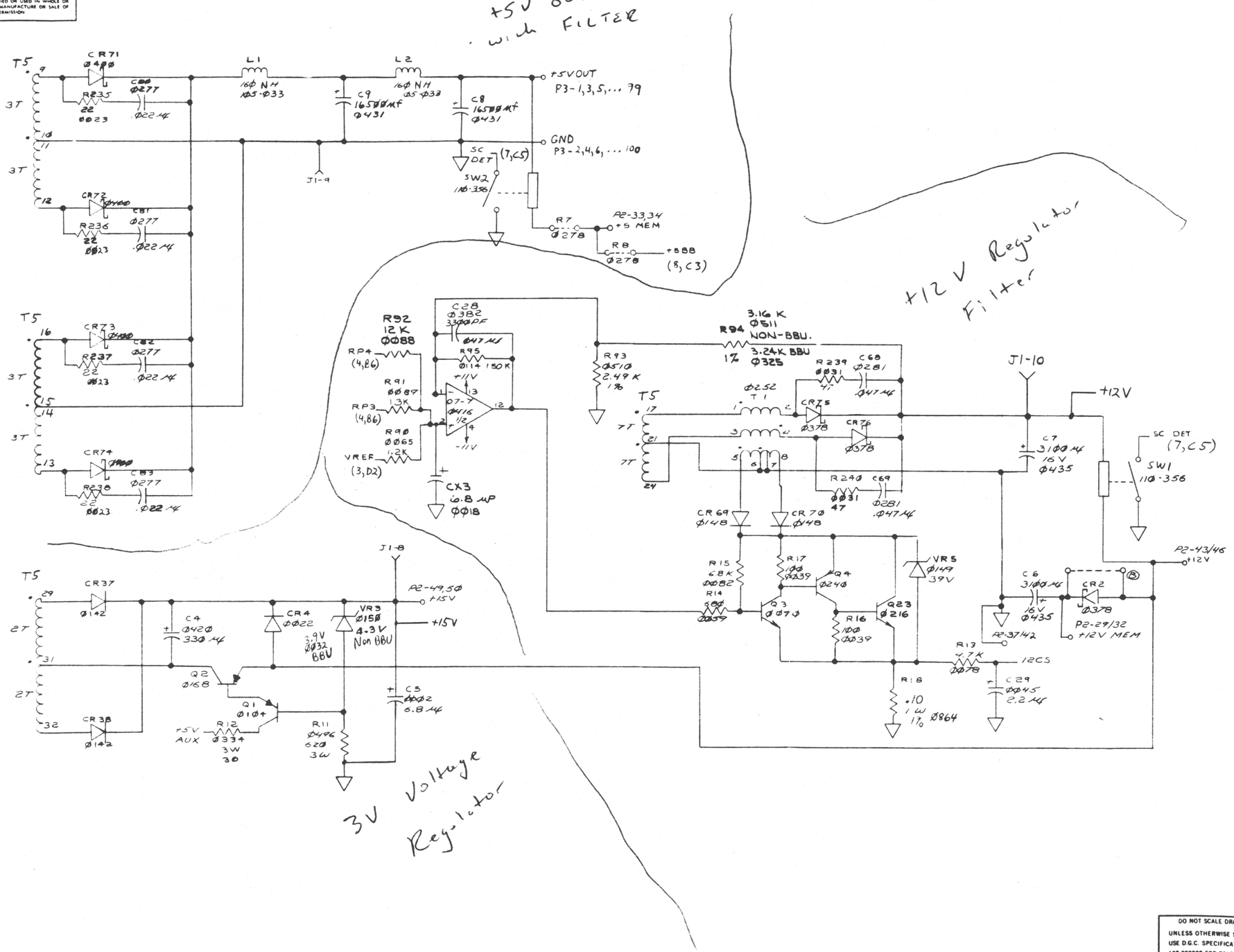

+5V Output, +12 Output + Regulator, +15 Regulator

ITEM	QTY	DESCRIPTION	PART NO.

DO NOT SCALE DRAWING. UNLESS OTHERWISE SPECIFIED USE D.G.C. SPECIFICATION 108-000028 FOR TOLERANCES AND WORKMANSHIP REQUIREMENTS.

MATERIAL

FINISH

DRAWN	Mike Bulak	2-24-78
CHECKED		
ENGINEER		
APPROVED		
FIRST USED ON		

DATA GENERAL CORPORATION
SOUTHBORO, MASS. 01772

TITLE
NOVA 4
POWER SUPPLY
PCB

SCALE	CODE IDENT.	SIZE	CODE	DRAWING NUMBER
	34984	D		0010001524 10

SHEET 2 OF 8

THIS DRAWING AND SPECIFICATIONS, HEREIN, ARE THE PROPERTY OF DATA GENERAL CORPORATION AND SHALL NOT BE REPRODUCED OR COPIED OR USED IN WHOLE OR IN PART AS THE BASIS FOR MANUFACTURE OR SALE OF ITEMS WITHOUT WRITTEN PERMISSION.

REV	DESCRIPTION	DRFTG	APP BY	DATE

REVISIONS

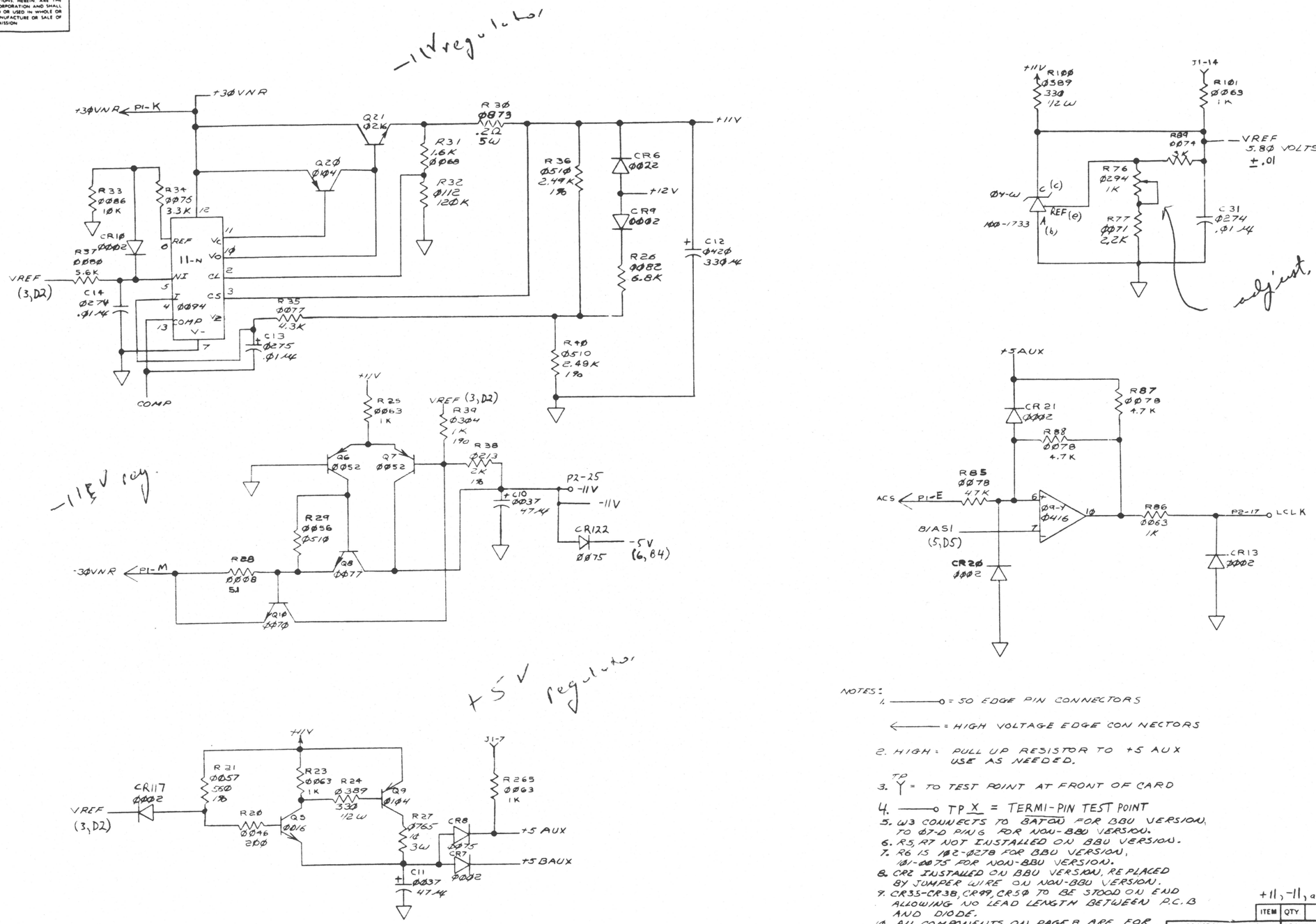

NOTES:

1. ——o = 50 EDGE PIN CONNECTORS
   ←—— = HIGH VOLTAGE EDGE CONNECTORS
2. HIGH: PULL UP RESISTOR TO +5 AUX USE AS NEEDED.
3. TP Y = TO TEST POINT AT FRONT OF CARD
4. ——o TP X = TERMI-PIN TEST POINT
5. W3 CONNECTS TO BATØU FOR BBU VERSION, TO Ø7-D PIN 6 FOR NON-BBU VERSION.
6. R5, R7 NOT INSTALLED ON BBU VERSION.
7. R6 IS 1Ø2-Ø278 FOR BBU VERSION, 1Ø1-ØØ75 FOR NON-BBU VERSION.
8. CR2 INSTALLED ON BBU VERSION, REPLACED BY JUMPER WIRE ON NON-BBU VERSION.
9. CR35-CR38, CR99, CR5Ø TO BE STOOD ON END ALLOWING NO LEAD LENGTH BETWEEN P.C.B AND DIODE.
10. ALL COMPONENTS ON PAGE 8 ARE FOR BATTERY BACKUP ONLY EXCEPT RØ7, RØ8, C32, CR23 AND ASSOCIATED JUMPER.

+11, -11, and +5Aux Regulators, VRef., LClock

ITEM	QTY	DESCRIPTION	PART NO.

DO NOT SCALE DRAWING. UNLESS OTHERWISE SPECIFIED USE D.G.C. SPECIFICATION 108-000028 FOR TOLERANCES AND WORKMANSHIP REQUIREMENTS

MATERIAL

FINISH

DRAWN Mark Bulak 228-75
CHECKED
ENGINEER
APPROVED
FIRST USED ON

DATA GENERAL CORPORATION
SOUTHBORO, MASS. 01772

TITLE
NOVA 4
POWER SUPPLY
PCB

SCALE	CODE IDENT.	SIZE	CODE	DRAWING NUMBER	REV
	34984	D		ØØ1ØØ1524	10

SHEET 3 OF 8

0130008836

THIS DRAWING AND SPECIFICATIONS HEREIN ARE THE PROPERTY OF DATA GENERAL CORPORATION AND SHALL NOT BE REPRODUCED OR COPIED OR USED IN WHOLE OR IN PART AS THE BASIS FOR MANUFACTURE OR SALE OF ITEMS WITHOUT WRITTEN PERMISSION

REV	DESCRIPTION	DRFTG	APP BY	DATE

REVISIONS

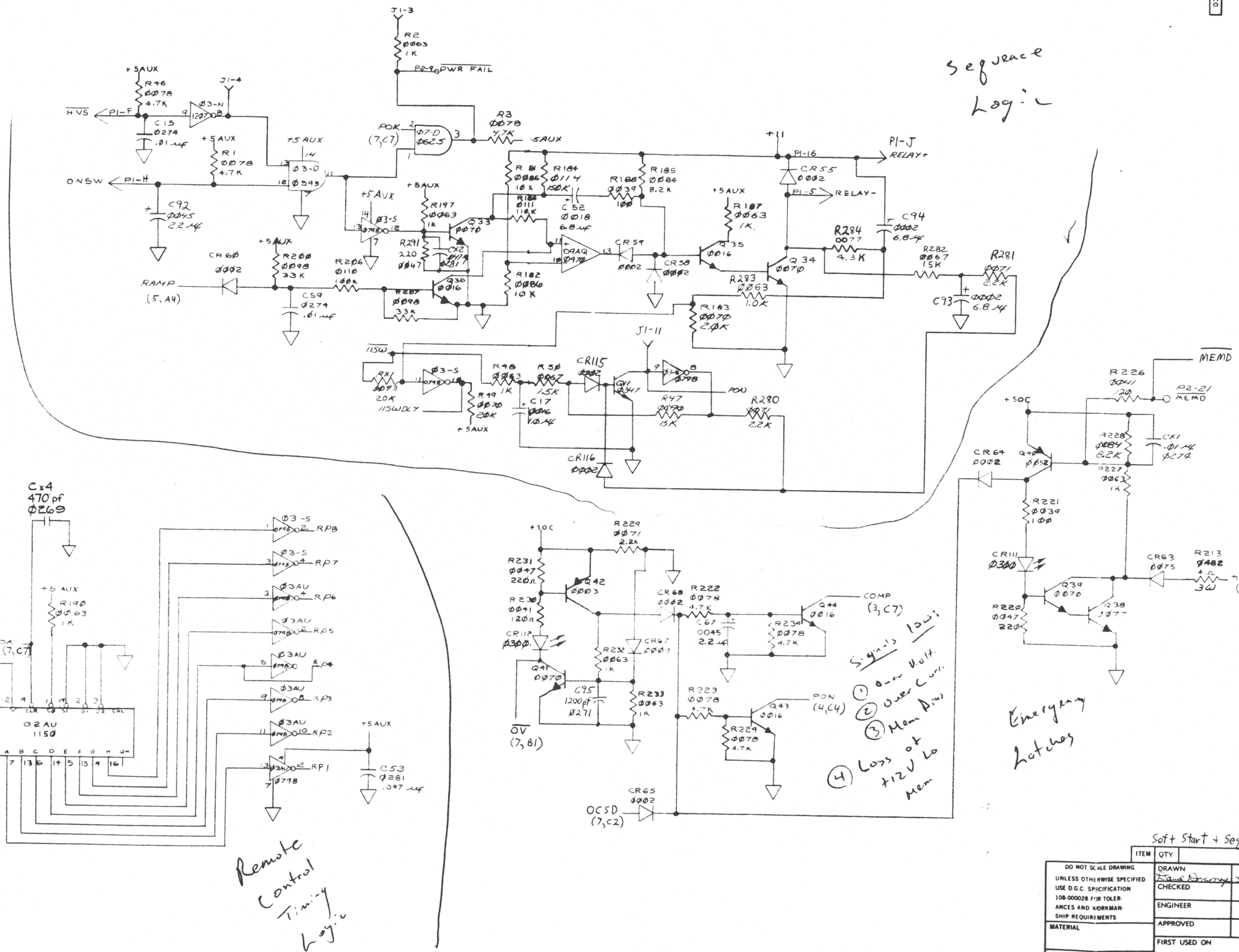

Soft Start + Sequencing, Remote Program, Emergency Latches

ITEM	QTY	DESCRIPTION	PART NO

DO NOT SCALE DRAWING. UNLESS OTHERWISE SPECIFIED USE D.G.C. SPECIFICATION 10B-000028 FOR TOLERANCES AND WORKMANSHIP REQUIREMENTS

MATERIAL

FINISH

DRAWN David Downey 2-1-78
CHECKED
ENGINEER
APPROVED
FIRST USED ON

DATA GENERAL CORPORATION
SOUTHBORO, MASS. 01772

TITLE
NOVA 4 POWER SUPPLY PCB

SCALE	CODE IDENT.	SIZE	CODE	DRAWING NUMBER	REV
	34984	D		001001524	10

SHEET 4 OF 8

DRAWING 40-538 20411-2

013000838

THIS DRAWING AND SPECIFICATIONS, HEREIN, ARE THE PROPERTY OF DATA GENERAL CORPORATION AND SHALL NOT BE REPRODUCED OR COPIED OR USED IN WHOLE OR IN PART AS THE BASIS FOR MANUFACTURE OR SALE OF ITEMS WITHOUT WRITTEN PERMISSION

REV	REVISIONS			
REV	DESCRIPTION	DRFTG	APP BY	DATE
ECO				

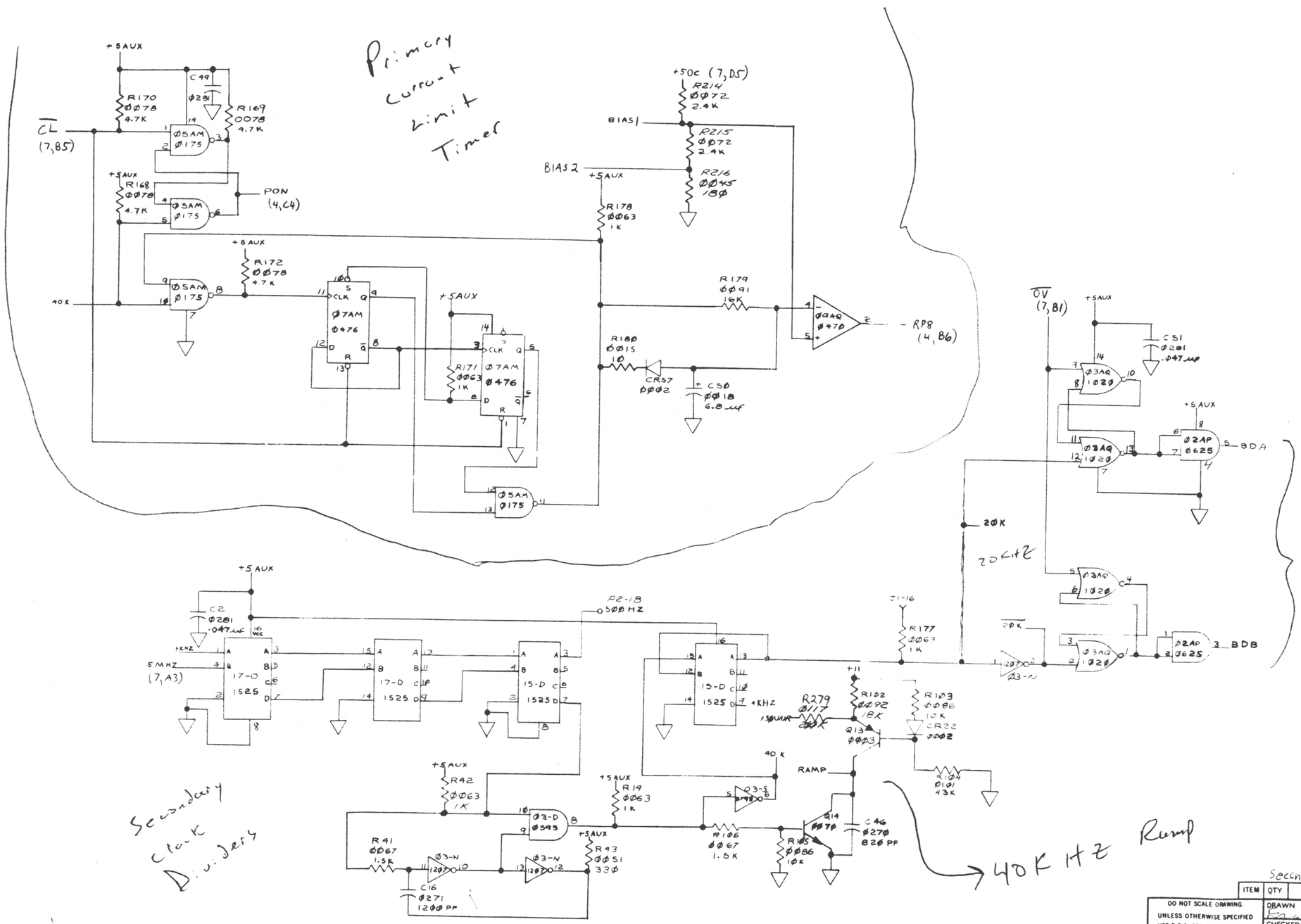

Secondary Clock Dividers, Overcurrent Counter

ITEM	QTY	DESCRIPTION	PART NO.

DO NOT SCALE DRAWING. UNLESS OTHERWISE SPECIFIED USE D.G.C. SPECIFICATION 108-000028 FOR TOLERANCES AND WORKMANSHIP REQUIREMENTS

MATERIAL

FINISH

DRAWN

CHECKED

ENGINEER

APPROVED

FIRST USED ON

SCALE

DATA GENERAL CORPORATION
SOUTHBORO, MASS. 01772

TITLE

NOVA 4
POWER SUPPLY
PCB

CODE IDENT.	SIZE	CODE	DRAWING NUMBER	REV.
34984	D		001001524	10

SHEET 5 OF 8

THIS DRAWING AND SPECIFICATIONS HEREIN ARE THE PROPERTY OF DATA GENERAL CORPORATION AND SHALL NOT BE REPRODUCED OR COPIED OR USED IN WHOLE OR IN PART AS THE BASIS FOR MANUFACTURE OR SALE OF ITEMS WITHOUT WRITTEN PERMISSION

REVISIONS				
REV	DESCRIPTION	DRFTG.	APP BY	DATE

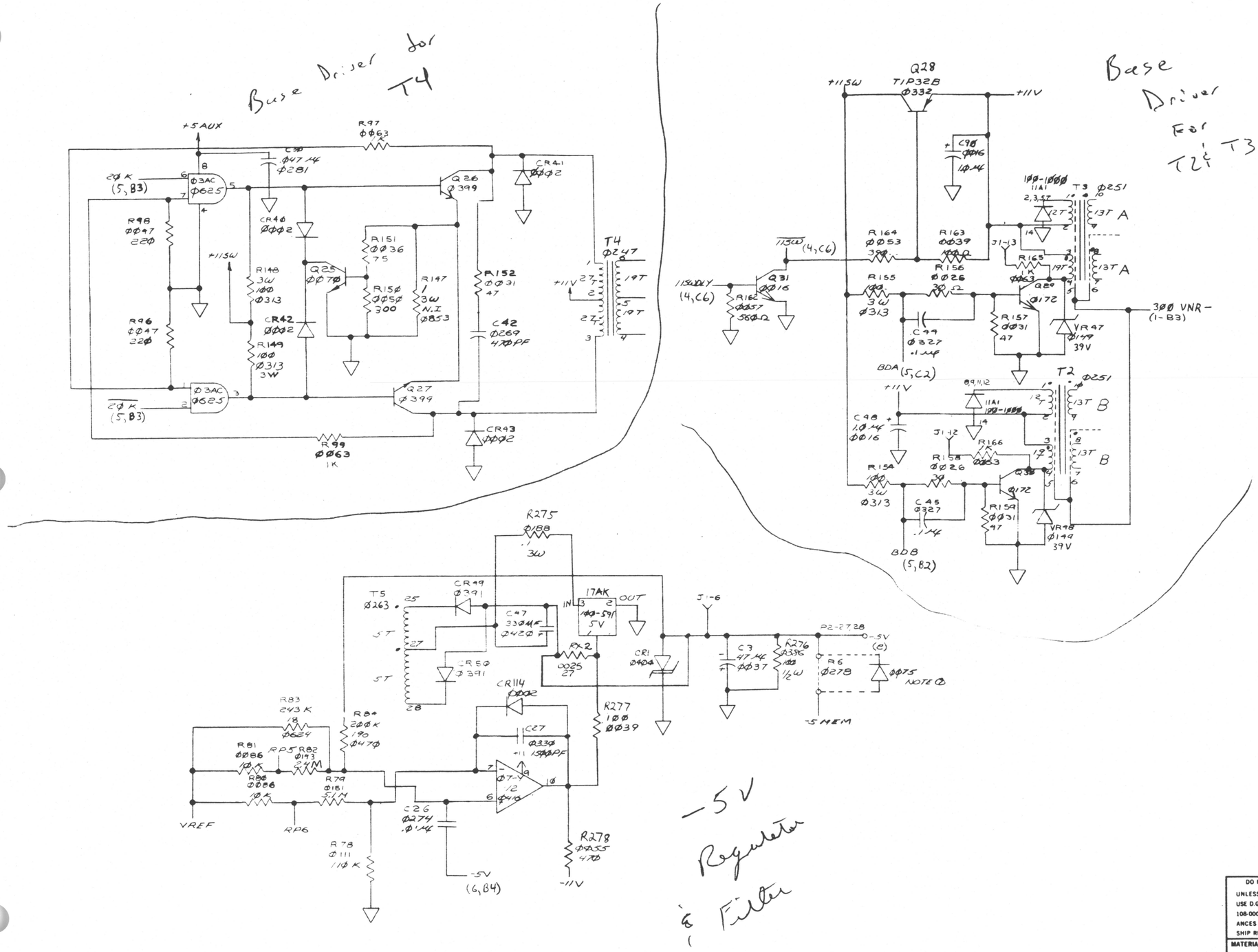

Base Drivers (Primary side), -5 Volt Output

ITEM	QTY	DESCRIPTION	PART NO.

DO NOT SCALE DRAWING. UNLESS OTHERWISE SPECIFIED USE D.G.C. SPECIFICATION 108-000028 FOR TOLERANCES AND WORKMANSHIP REQUIREMENTS

MATERIAL

FINISH

DRAWN Mark Bulak 3/21/78
CHECKED
ENGINEER
APPROVED
FIRST USED ON

DATA GENERAL CORPORATION
SOUTHBORO, MASS. 01772

TITLE
NOVA 4
POWER SUPPLY
PCB

SCALE	CODE IDENT.	SIZE	CODE	DRAWING NUMBER	REV.
	34984	D		ØØ1ØØ1524	10

SHEET 6 OF 8

DRAWING 40-538 20411-2

013000838

THIS DRAWING AND SPECIFICATIONS, HEREIN, ARE THE PROPERTY OF DATA GENERAL CORPORATION AND SHALL NOT BE REPRODUCED OR COPIED OR USED IN WHOLE OR IN PART AS THE BASIS FOR MANUFACTURE OR SALE OF ITEMS WITHOUT WRITTEN PERMISSION

REV	REVISIONS			
REV	DESCRIPTION	DRFTG	APP BY	D.

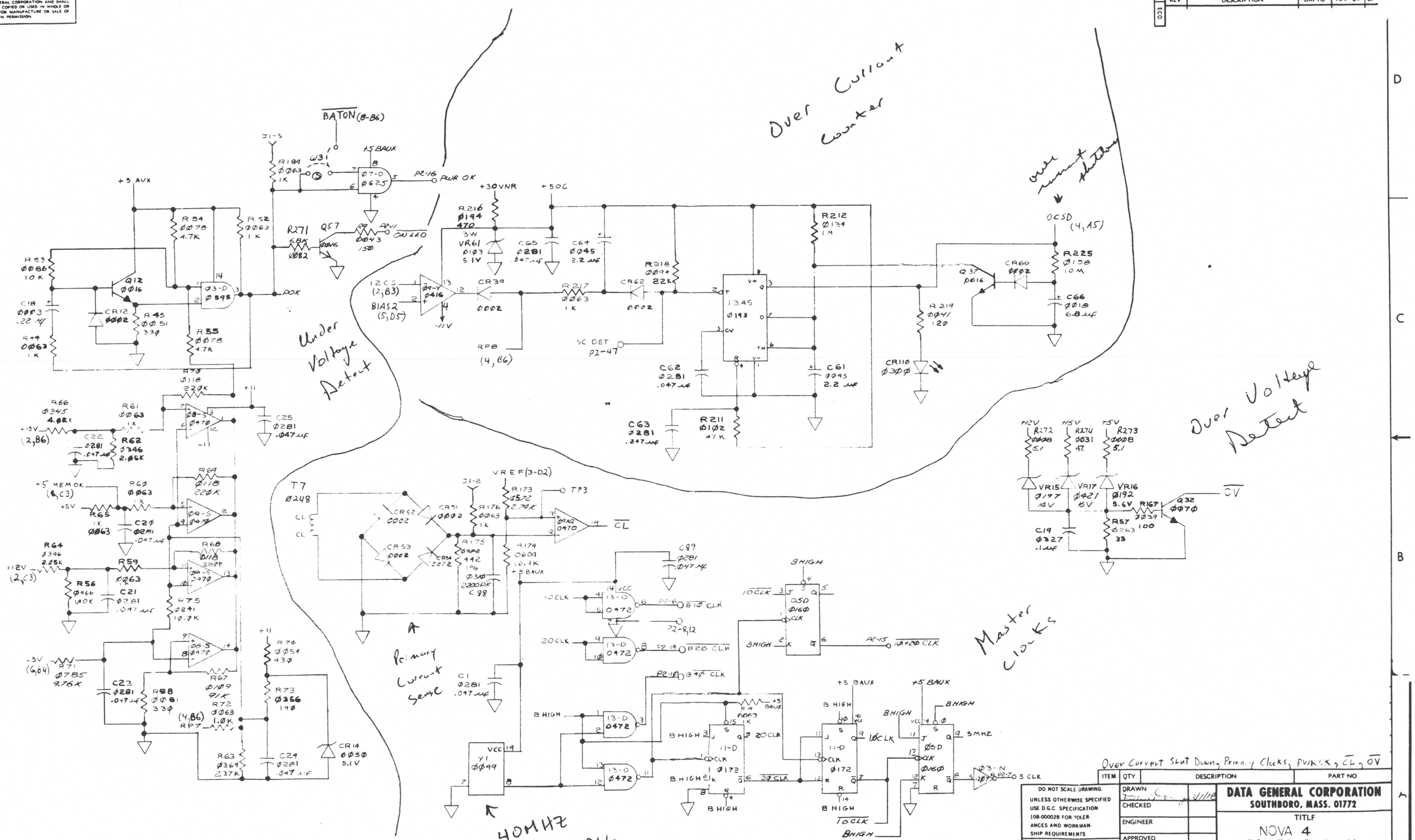

Over Current Shut Down, Primary Clocks, POK, CL, OV

ITEM	QTY.	DESCRIPTION	PART NO

DO NOT SCALE DRAWING. UNLESS OTHERWISE SPECIFIED USE D.G.C. SPECIFICATION 108-000028 FOR TOLERANCES AND WORKMANSHIP REQUIREMENTS

MATERIAL

FINISH

DRAWN		3/1/78
CHECKED		
ENGINEER		
APPROVED		
FIRST USED ON		

DATA GENERAL CORPORATION
SOUTHBORO, MASS. 01772

TITLE
NOVA 4
POWER SUPPLY
PCB

SCALE	CODE IDENT.	SIZE	CODE	DRAWING NUMBER	REV
	34984	D		001001524	10

SHEET 7 OF 8

THIS DRAWING AND SPECIFICATIONS HEREIN, ARE THE PROPERTY OF DATA GENERAL CORPORATION AND SHALL NOT BE REPRODUCED OR COPIED OR USED IN WHOLE OR IN PART AS THE BASIS FOR MANUFACTURE OR SALE OF ITEMS WITHOUT WRITTEN PERMISSION

REVISIONS				
REV	DESCRIPTION	DRFTG	APP BY	DATE
ECO				

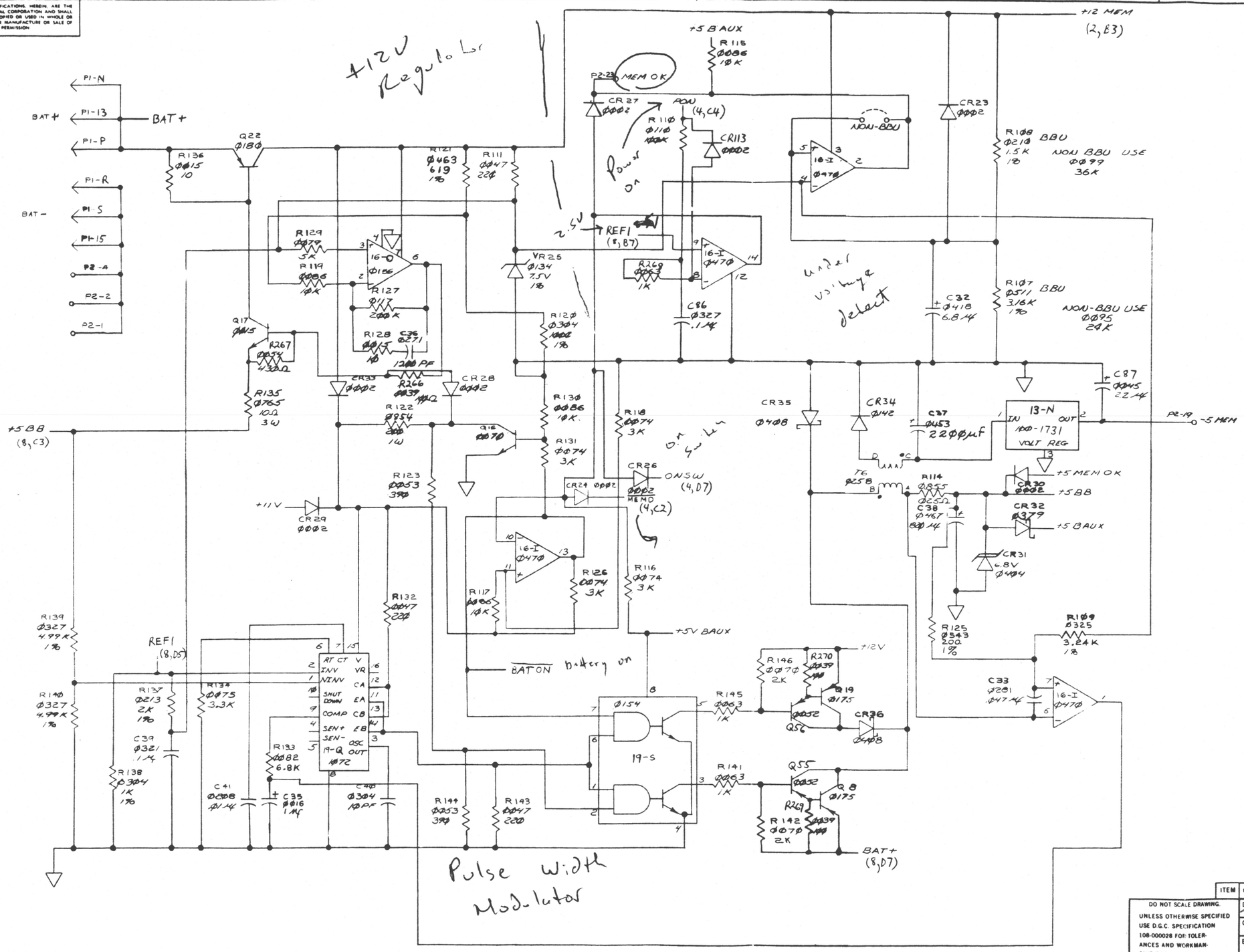

Battery Back-up (+5 MEM, -5 MEM, +12 MEM)

ITEM	QTY	DESCRIPTION	PART NO.

DO NOT SCALE DRAWING. UNLESS OTHERWISE SPECIFIED USE D.G.C. SPECIFICATION 108-000028 FOR TOLERANCES AND WORKMANSHIP REQUIREMENTS

MATERIAL

FINISH

DRAWN Mark Bulak 3/1/78
CHECKED
ENGINEER
APPROVED
FIRST USED ON

DATA GENERAL CORPORATION
SOUTHBORO, MASS. 01772

TITLE
NOVA 4
POWER SUPPLY
PCB

SCALE	CODE IDENT.	SIZE	CODE	DRAWING NUMBER	REV
	34984	D		ØØ1ØØ1524	10

SHEET 8 OF 8