Model TC-133

Mag Tape Coupler

Technical Manual

Document No: 600-242-01
Revision: E
Date: 02/24/86
Serial No.:

NOTICE

ZETACO, Inc. has prepared this technical manual for use by ZETACO personnel and its customers to assist in the installation, operation and maintenance of the Model TC-133 Magnetic Tape Coupler. The information contained herein is the property of ZETACO, Inc. and shall net be reproduced in whole nor in part without prior written approval of ZETACO, Inc.

ZETACO, Inc. makes every effort to produce quality products and documentation, however, the reader must be cautioned that changes may be made to the product not reflected in the supplied documentation. If you find errors or omission, please notify ZETACO, Inc. to remedy the problem. ZETACO, Inc. shall not be responsible for any damages (including consequential) caused by reliance on this material as presented.

If installation problems arise after you thoroughly review the manual, please contact your ZETACO Authorized Factory Distributor, your maintenance contractor, or the ZETACO Customer Support Hotline at 612-890-5138 or 1-800-537-5292.

REVISION HISTORY

ECO No.	Date	Description	Pages
0060	9-17-83	Added P/N and Revision History	
0196	10-05-83	Released New Manual	
0226	11-23-83	Typos Corrected	3-3, 3-7, 3-9
0282	03-29-84	Changed Name from 130 to 133 plus Miscellaneous Changes	
0313	05-22-84	Typos Corrected	3-2,3-3, 3-7,3-9, 3-10,5-2, 6-1,6-2
0328	06-28-84	New ZETACO Cover	
0331	07-12-84	Page 3-10	
0347	07-26-84	Rev. Manual	
0380	09-25-84	See ECO	
0392	10-02-84	See ECO	
0477	09-26-85	Release New Paddleboards	
0519	12-05-85	Add Vector Pins	
0575	02-24-86	Update Manual	
0590	04-07-86	Paddleboard Update	
0714	10-16-86	Attach ground braid on FCC external cables.	3-9

TABLE OF CONTENTS

		Page No.
Title Page		i
Notice		ii
Revision History		iii
Table of Contents		iv-v
List of Tables, List of Illustrations		v
Section:		
1.0	INTRODUCTION	1-1
1.1	Features	1-1
2.0	SPECIFICATIONS	2-1
2.1	Interface	2-1
2.2	Power	2-1
2.3	Physical	2-1
2.4	Environment	2-1
2.5	Magnetic Tape Media Capacity	2-4
3.0	INSTALLATION	3-1
3.1	Unpacking and Inspection	3-1
3.2	Configuring the Model TC-133	3-2
	3.2.1 6021 Emulation	3-2
	3.2.2 6125 Emulation	3-2
	3.2.3 Jumper Table	3-3
3.3	Board Insertion	3-5
3.4	Priority Selection	3-5
3.5	Drive Cable Installation	3-7
	3.5.1 Paddleboard Installation	3-7
	3.5.2 Non-FCC Paddleboard-to-Drive Cabling	3-7
	3.5.3 FCC Internal Cabling	3-9
	3.5.4 FCC External Cabling	3-9
4.0	DIAGNOSTIC SUPPORT PACKAGE (DSP)	4-1
4.1	DSP General Information	4-1
	4.1.1 Bootstrap Procedures	4-1
	4.1.2 Loading Programs onto Disk	4-2
4.2	Diagnostics	4-3
4.3	Reliability	4-4
4.4	Utility Programs	4-5
5.0	TROUBLE-SHOOTING	5-1
5.1	Customer Support Hotline	5-2
5.2	Product Return Authorization	5-2
5.3	Warranty Information	5-2

Page No.

6.0 PROGRAMMING NOTES 6-1

6.1 Instruction Format 6-1
6.1.1 SKIP Instructions 6-1
6.2 DOA - Send Command 6-2
6.3 DOB - Load Starting Memory Address 6-4
6.4 DOC - Load Word Count 6-5
6.5 DIA - Read Status 6-5
6.6 DIB - Read Current Address 6-8
6.7 DIC - Read Check Characters 6-9
6.8 Command Descriptions 6-10
6.8.1 Read 6-10
6.8.2 Write 6-11
6.8.3 Write End of File 6-11
6.8.4 Rewind 6-11
6.8.5 Space Forward 6-12
6.8.6 Space Reverse 6-12
6.8.7 Erase 6-12
6.9 Data Channel Operation 6-13

7.0 STREAMING MODES 7-1

7.1 Re-Instruct Table 7-2

8.0 SYSTEMS GUIDELINES 8-1

8.1 SYSGEN Considerations 8-1
8.2 Streaming Mode Utilities 8-1
8.2.1 RDOS Executible Utilities 8-2
8.2.2 AOS Executible Utilities 8-2
8.2.3 Stand-Alone Utility 8-3
8.2.4 Other Operating Systems 8-3
8.3 User-Written Programs 8-3
8.4 Performance Chart 8-4

LIST OF TABLES

Page No.

Table 5.1 Self-test Error Codes 5-1

LIST OF ILLUSTRATIONS

Page No.

Figure 2.1 Daisy-Chaining - Streamer Drives Only 2-2
Figure 2.2 Daisy-Chaining - Embedded Formatter & Streamer Drives 2-2
Figure 2.3 Daisy-Chaining - Two Embedded Formatters 2-3
Figure 2.4 Example Tape Formats 2-3
Figure 3.1 Jumper Table 3-6
Figure 3.2 Non-FCC Cabling 3-8
Figure 3.3 FCC Cabling 3-10

1.0 INTRODUCTION

The ZETACO, Inc. TC-133 Magnetic Tape Coupler interfaces to tape drives with industry standard Pertec embedded formatters, which employ PE, NRZ, GCR and other recording formats. The Coupler transfers up to 64K word blocks of data and is totally transparent to Data General's Operational Software. The Coupler emulates Data General 6021 (used with RDOS or AOS) or Data General 6125 (used with AOS or AOS/VS) tape subsystems.

1.1 FEATURES

.Microprocessor based controller adds flexibility and performance enhancements.

a) Dynamic inter-record gap
b) Read/Look-Ahead

} These features enhance streaming capability using standard DG software.

.FIFO buffering for data channel latency.

.Automatic Self-test with visual error reporting by LED.

.Memory addressing capability to 32K words (64K optional).

.Software selectable streamer modes

.Supports up to eight tape drives.

.Requires only +5 volts, with less power consumption than embedded type controllers.

.Automatic High Speed File Search.

2.0 SPECIFICATIONS

2.1 INTERFACE

Electrical: Industry Standard Embedded Formatter, Open Collector, Low Active, TTL

Driver: Logic Low = .4V Minimum
Logic High = 2.4V Minimum

Receiver: Schmidt Trigger

Cabling: Two 50-pin ribbon cables installed on computer backplane or FCC cabling.

(Maximum recommended cable length between Coupler and last formatter is 20 feet.)

Parity: Odd (Even parity for maintenance only)

Daisy Chain: 8 Drives or 3 Drives plus Formatted Drive (Refer to Figures 2.1, 2.2, and 2.3).

Figure 2.1 - Up to 8 Streamer Drives

Figure 2.2 - 1 to 4 Streamers and a Formatted Drive

Figure 2.3 - 2 Formatters with 3 Drives on each Formatted Drive

2.2 POWER

Typically 3.0 Amps at +5 Volts.

2.3 PHYSICAL

Dimensions: 15 in. by 15 in. by 1/2 in.

Weight: 10 lbs. including cables and manuals

2.4 ENVIRONMENT

Operating Temp: 0 to 55 degrees C

Relative Humidity: 10% to 90% (non-condensing)

FIGURE 2.1 Daisy-Chaining - Streamer Drives Only

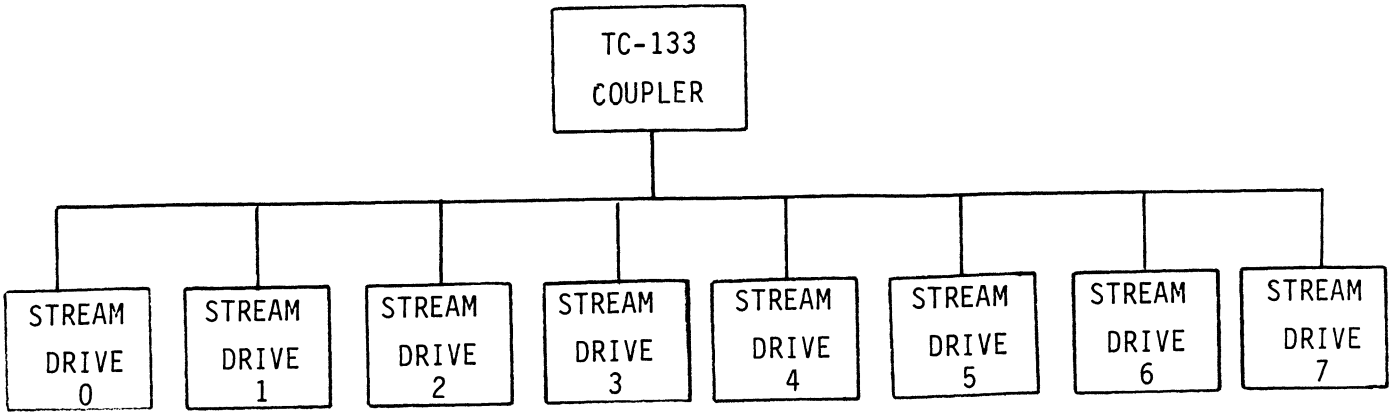

FIGURE 2.2 Daisy-Chaining - Embedded Formatter & Streamer Drives

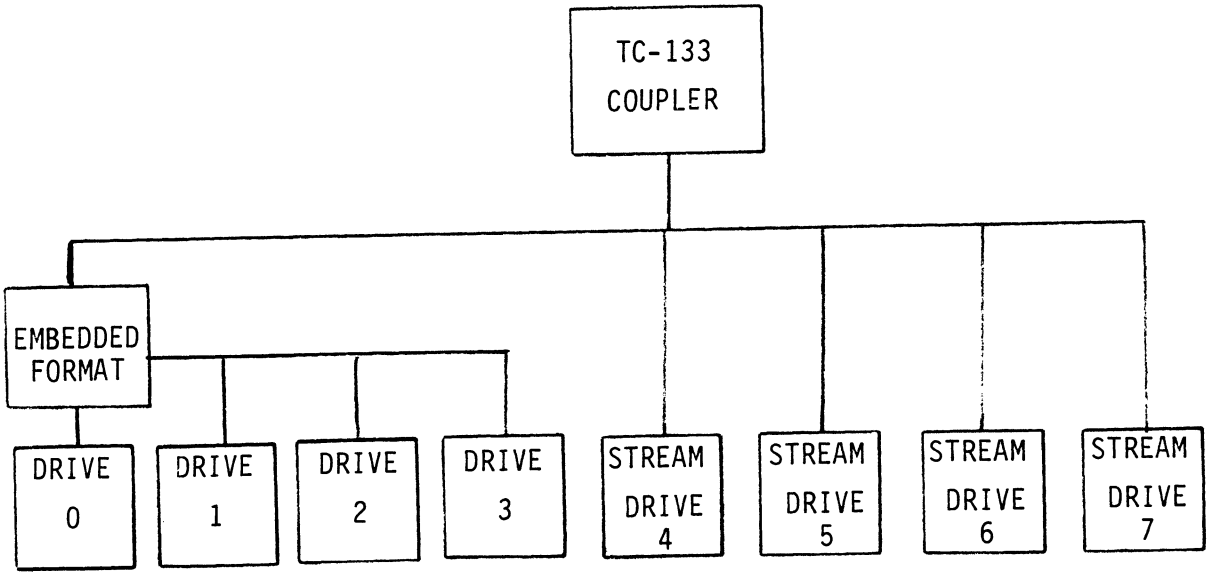

FIGURE 2.3 Daisy-Chaining - Two Embedded Formatters

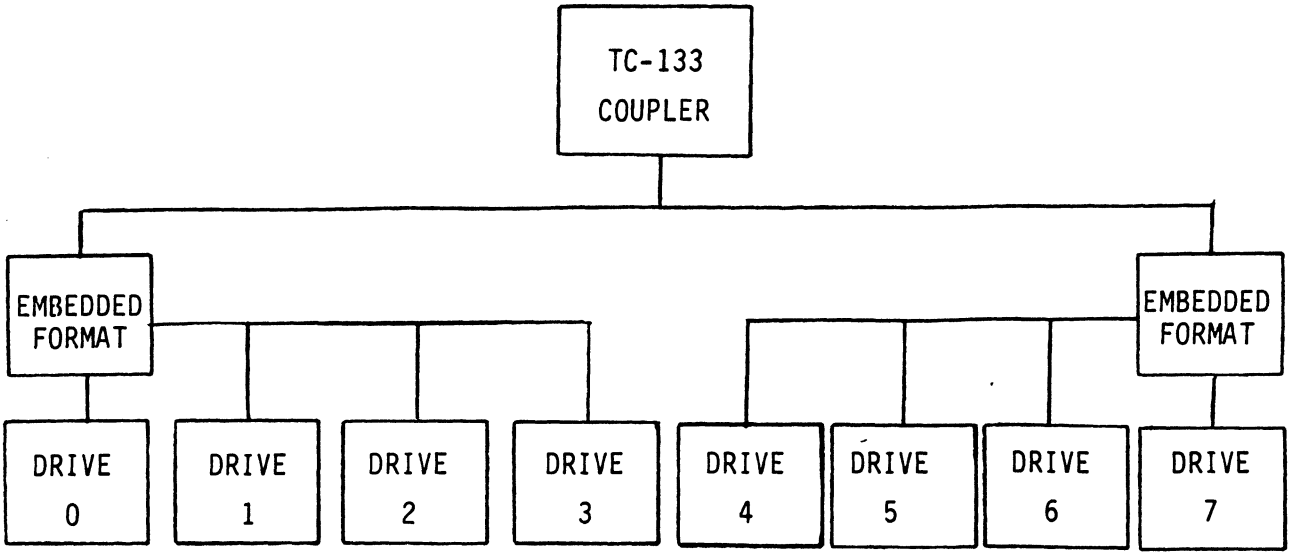

FIGURE 2.4 Example Tape Formats

Phase Encoded (PE)

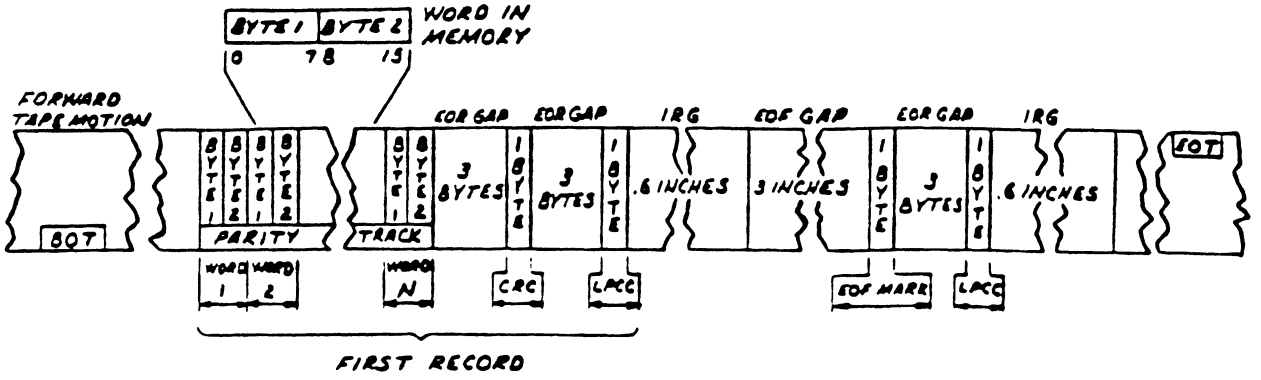

Non-Return To Zero (NRZ)

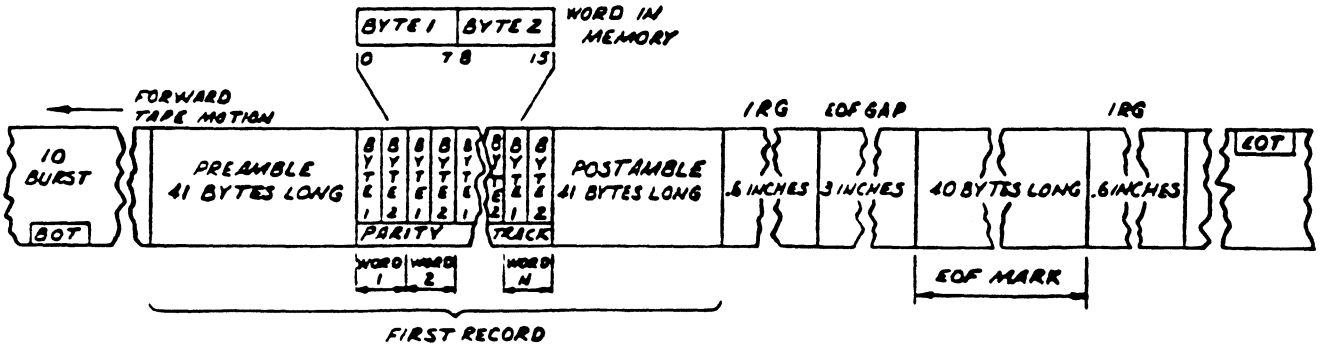

2.5 MAGNETIC TAPE MEDIA CAPACITY

The following formula will aid in determining how much data storage capacity in Bytes (Byte = 8 Bits) a length of tape will offer.

$$\#\ \text{OF BYTES/LENGTH OF TAPE} = \frac{(\text{TLEN} - 25)\ (\text{RLEN})\ (12)}{((\text{RLEN} + \text{TFD})/\text{BPI}) + \text{GAPL})}$$

TLEN = LENGTH OF TAPE IN FEET
RLEN = RECORD LENGTH IN BYTES
TFD = TAPE FORMAT DATA (PE = 82, NRZ = 8)
BPI = RECORDING DENSITY (PE = 1600, NRZ = 800)
GAPL = GAP LENGTH IN INCHES (NOMINAL = .6")

3.0 INSTALLATION

Please read the following Installation Section carefully in addition to SYSGEN Considerations (Section 8.1). ZETACO recommends running Diagnostics after the Coupler has been configured for the correct jumper settings. Refer to Sections 4.0 through 4.2.

NOTE: If you plan on interfacing to a streamer tape drive, you must read Sections 7 and 8 of this manual.

3.1 UNPACKING AND INSPECTION

All parts comprising the Model TC-133 are shipped in one container consisting of:

		P/N
a)	TC-133 Magnetic Tape Coupler with Protective Board Cover	500-242-00
b)	"A" Paddleboard	500-411-00
c)	"B" Paddleboard	500-412-00
d)	Diagnostic Support Tape	400-242-00
e)	Technical Manual	600-242-01

OPTIONAL CABLING

For non-FCC Chassis:

f)	Coupler-to-Drive Cable, 10' (requires 2)	300-037-00

For FCC-Compliant Chassis:

g)	Internal Cable, 18" (requires 2)	300-108-00
h)	External Cable, 10' (requires 2)	300-001-00

Upon receipt of the Model TC-133 from the carrier, inspect the shipping carton immediately for any evidence of damage or mishandling in transit.

If the shipping carton is water stained or damaged, contact the carrier and shipper immediately, specify the nature and extent of the damage and request that the carrier's agent be present when the carton is opened.

ZETACO's warranty does not cover shipping damage.

For repair or replacement of any ZETACO product damaged in shipment, call ZETACO to obtain Return Authorization instructions.

3.2 CONFIGURING THE MODEL TC-133

To properly configure the Coupler you must select one of two Emulations (determined by your Operating System), the device code to be used and other considerations. This Manual makes reference to a 133 (6021 Emulation) and a 133A (6125 Emulation). They are the same board, only the jumpers are changed.

3.2.1 6021 EMULATION

The 6021 Emulation is used by RDOS (referenced to as MTX) and can be used by AOS (referenced to as MTA). The standard (STD) jumper settings are defaulted to this Emulation (6021). Section 8.1 refers to 6021 Emulation.

NOTE: J5 enabled for streamer drives and disabled for start/stop drives.

3.2.2 6125 EMULATION (MV SERIES COMPUTERS REQUIRES 6125 EMULATION)

The 6125 Emulation is used by AOS (referenced to as MTC). RDOS does not support the 6125 Emulation. Section 8.1 refers to 6125 Emulation. To properly select 6125 Emulation perform the following steps:

1. Select 64K Word Count J2 (C to A).

2. Select Maximum Address 177777 J6 (C to A IN).
   8

3. Select IDENT Status Disable J10 (C to B IN).

4. Select Corrected Error Disable J11 (C to B IN).

NOTE: J5 enabled for streamer drives and disabled for start/stop drives.

3.2.3 JUMPER TABLE

Refer to Figure 3.1.

The following jumpers are used to configure the TC-133 to meet a Customer's needs. (STD) indicates a standard configuration unless otherwise specified upon order.

Primary/Secondary Device Code	J1 (IN) J7 (IN)	= 22 Device Code 8 (STD)
	J1 (OUT) J7 (IN)	= 62 Device Code 8
Word Count Size	J2 (C to B IN) (C to A OUT)	= 4K Word Count Size (STD)
	J2 (C to A IN) (C to B OUT)	= 64K Word Count Size

For 6021 Emulation select 4K Word Count Size.
For 6125 Emulation select 64K Word Count Size.

Density Select*	J3 (C to A IN) (C to B OUT)	= DIA - 4 Bit always HI (STD)
	J3 (C to B IN) (C to A OUT)	= Drive Determines Status
	J4	Factory use Only

CAUTION: If using RDOS, J3 C to A must be IN, otherwise RDOS sees the unit as being improperly selected.

Read/Look-Ahead	J5 (IN) Streamer	= Read/Look-Ahead Enabled (STD)
	J5 (OUT) Start/Stop	= Read/Look-Ahead Disabled

CAUTION: Streamer Drives should have Read/Look-Ahead enabled for optimum performance. Disable for Start/Stop drives (such as vacuum column or tension arm), cache drive, or more than one drive daisy-chained to the Coupler.

* NOTE: Remote switching of Density Selection is not supported. Locally switching the density is required.

EXAMPLE OF TAPE DRIVES REQUIRING READ/LOOK-AHEAD DISABLE

Type of Tape Drive		CIPHER	KENNEDY	STC
Start/Stop	without vacuum column	F100 Series	9000,9100 9600-9800	
Start/Stop	with vacuum column	F900 Series	9300	
Start/Stop	cache	F890, F891		
Start/Stop	GCR		9400	2920

Quantity of one per controller board.

Example of Streamer drives are the Cipher F880, CDC 92181, and CDC 92185 requiring read look ahead be enabled.

NOTE: Any tape drive in quantity of two or more connected to one model TC-133 requires Read/Look-Ahead be disabled.

Extended Memory	J6 (C to B IN) (C to A OUT)	= Max address = 77777_8 (STD)
Address	J6 (C to A IN) (C to B OUT)	= Max address = 177777_8

For 6021 Emulation select Max Address = 77777_8

For 6125 Emulation select Max Address = 177777_8

Alternate Device	J7 (OUT) (J1 IN)	= 20_8 Device Code(STD)
	J7 (OUT) (J1 OUT)	= 60_8 Device Code

Normal Rewind Status at BOT	J9 (IN)	J8 (OUT)
Fast BOT and Ready Status	J8 (IN)	J9 (OUT) (STD)

IDENT Status	J10 (C to A IN) (C to B OUT)	= Enabled IDENT Status, Bit 11 DIA (STD)
	J10 (C to B IN) (C to A OUT)	= Disable IDENT Status, Bit 11 DIA Always Zero

For "COPY" program and 6125 emulation disable IDENT Status.

Correctable Error Status	J11 (C to A IN) (C to B OUT)	= Enabled Correctable Error Status, Bit 12 DIA (STD)
	J11 (C to B IN) (C to A OUT)	= Disable Correctable Error Status, Bit 12 DIA Always Zero

For "COPY" program and 6125 emulation disable Correctable Error Status.

3.3 BOARD INSERTION

Carefully guide the Coupler board into the desired slot by allowing the edges of the board to follow the guides evenly. Use the lock tabs on the two outside corners to provide leverage when the board meets the connector. Use equal pressure on both lock tabs until the board seats firmly into the backplane connectors.

3.4 PRIORITY SELECTION

The Coupler must receive two priority signals from the Data General minicomputer backplane, data channel priority in (Pin A94) and interrupt priority in (Pin A96). If there are vacant slots between the Coupler and the processor, priority jumper wires must be installed to obtain priority continuity between controllers. To jumper across unused slots, connect A93 (Data Channel Priority Out) to A94 (Data Channel Priority In) and A95 (Interrupt Priority Out) to A96 (Interrupt Priority In).

FIGURE 3.1 Jumper Table

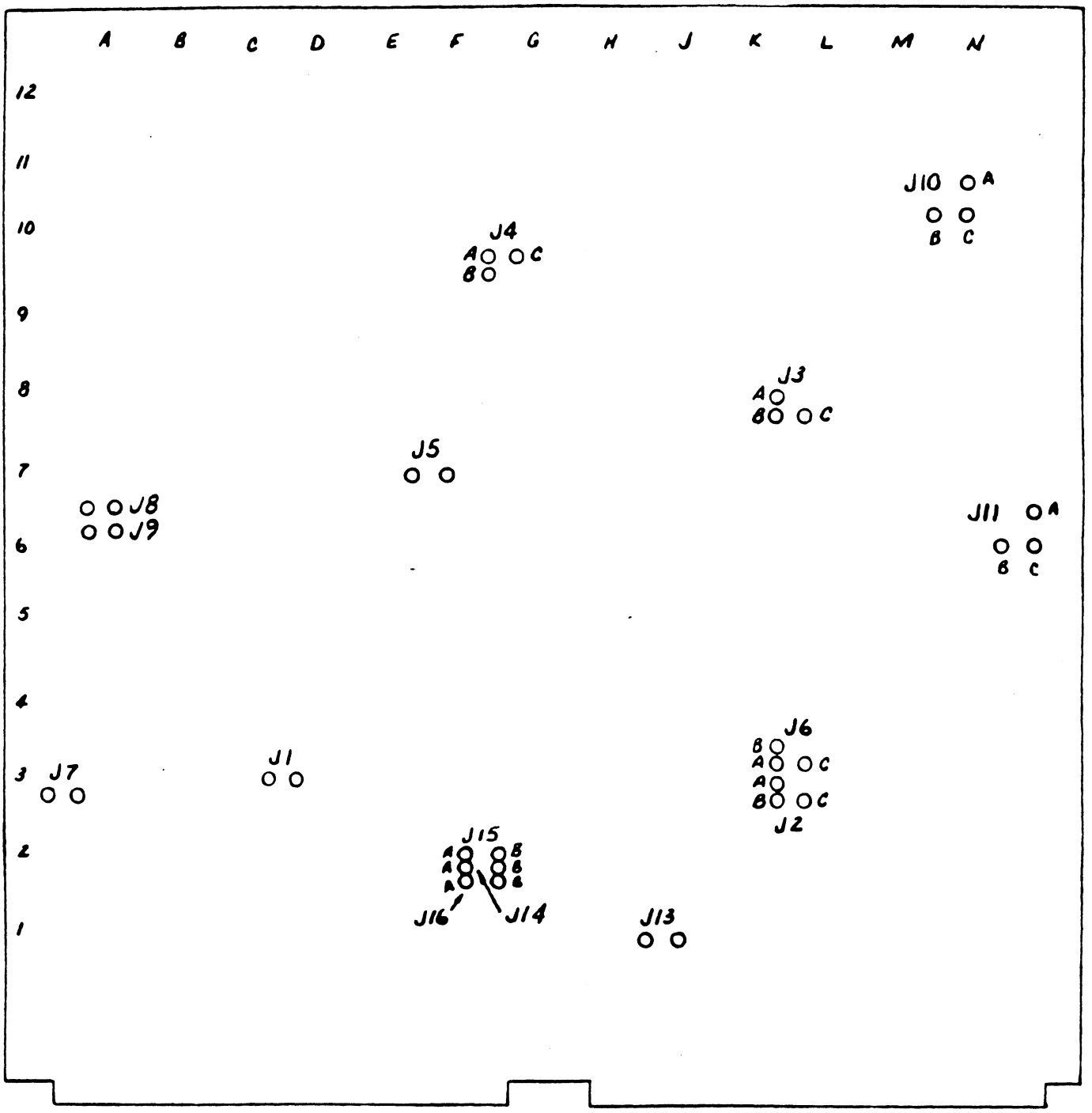

3.5 DRIVE CABLE INSTALLATION

3.5.1 PADDLEBOARD INSTALLATION

Two paddleboards with 50-pin, 2-row cable headers provide the interface between the tape drive cabling and the computer backplane. The "A" paddleboard is P/N 500-411-00 and the "B" is P/N 500-412-00. Block connectors on each attach onto the row of backplane pins that correspond to the slot containing the TC-133 board. The computer backplane, viewed from the rear, contains the "A" side pins on the left and the "B" pins on the right. Pins on both sides are numbered 1 to 100 from left to right. On vertical card computers, the "A" side pins are on bottom. Reference Figure 3.2. Install the "A" paddleboard by placing it over pins A29-A100 with the header on top. First make sure all pins are straight, then carefully press the onto the pins, making sure all pins are inserted and do not bend, until the block is flush with the backplane. If necessary, gently rock the outer edge of the paddleboard up and down slightly to help guide the pins into the contacts. Install the "B" paddleboard onto pins B1-B72 by repeating the above procedure.

If necessary, gently rock the outer edge of the paddleboard up and down slightly to help guide the pins into the contacts. Install the "B" paddleboard onto pins B1-B72 by repeating the above procedure.

3.5.2 NON-FCC PADDLEBOARD-TO-DRIVE CABLING

Two ribbon cables (P/N 300-037-XX) attach the paddleboards directly to the tape drive board-edge connectors. Connect the 2-row receptacle end of the cables to the "A" and "B" paddleboards, observing that the arrow on the cable connector aligns with the arrow on the top right side of the header. To connect the cables to the tape drive formatter board, refer to Figure 3.2. Reference the tape drive manufacturers manual for proper connection to the tape drive connectors.

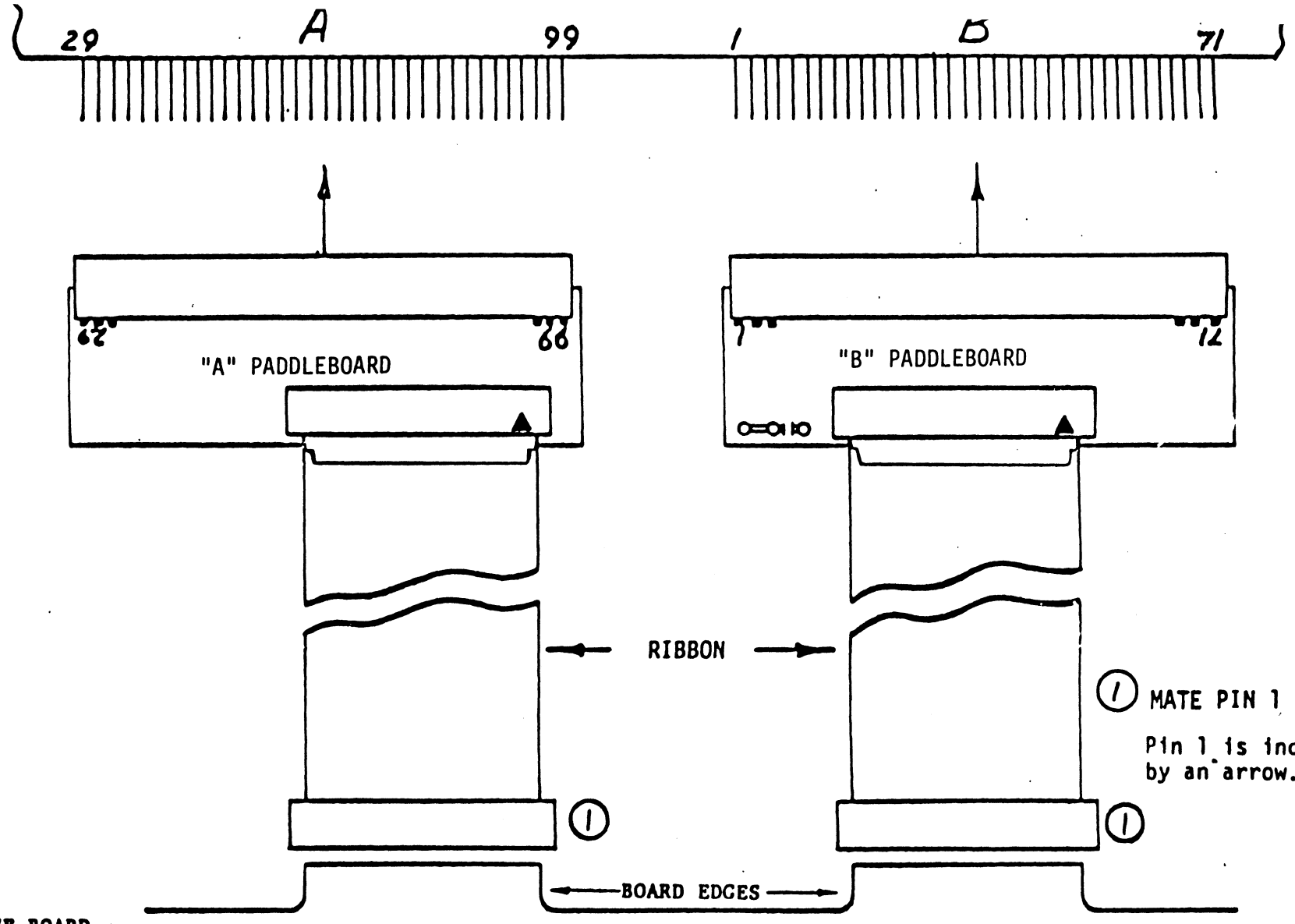

FIGURE 3.2 Non-FCC Cabling

DRIVE BOARD EDGE END		
Cipher Streamer	P2	P1
* Cipher Formatter	P5	P4
Kennedy Streamer	P2	P1
Kennedy Formatter	J1	J5
Kennedy 9400 GCR	P200	P100
CDC Streamer	J5	J4
Pertec	P5	P4
CDC GCR	J3	J2
**STC Adapter	P2	P1

*Requires Cipher 100 Pin to two 50 Pin Adapter Boards P/N 160006-001.

**Requires ZETACO 2920A Adapter Board P/N 500-395-00.

The following table can be referenced to ease the cable installation.

TAPE DRIVE	BACKPLANE A CONNECTOR	BACKPLANE B CONNECTOR
Cipher Streamer	P2	P1
*Cipher Formatter	P5	P4
Kennedy Streamer	P2	P1
Kennedy Formatter	J1	J5
Kennedy 9400 GCR	P200	P100
CDC Streamer	J5	J4
Pertec	P5	P4
CDC GCR	J3	J2
**STC 2920	P2	P1

*Requires Cipher 100-pin to two 50-pin Adapter Boards P/N 160006-001
**Requires ZETACO 2920A Adapter Board P/N 500-395-00

3.5.3 FCC INTERNAL CABLING

Two internal ribbon cables (P/N 300-108-XX) connect the paddleboard headers to the computer bulk head panel. Attach the 2-row receptacle end of the cables to the "A" and "B" paddleboards, observing that the arrows on the cable connectors align with the arrows on the top right side of the headers. To mount the "D" connectors, remove the covers from the necessary mounting holes on the panel. With the mounting hardware removed from the connectors, insert the connectors into the panel and insert the hex bolts from the outside. Secure each connector to the panel with the washers and nuts.

3.5.4 FCC EXTERNAL CABLING

Connect the two 300-001-00 cables as shown in Figure 3.4. Ensure Pin 1 on each cable connector (marked with small triangle or arrow) is aligned with Pin 1 of the drive formatter board. Mark each 300-001-00 cable "A" or "B", depending on whether it comes from the "A" or "B" side of the backplane. Also connect the external ground wire on both cables to the drive's chassis and mark it as cable "B". Example: Take either one of the 300-001-00 cables and connect it to the "A" side of the bulkhead and to the appropriate tape formatter connector. Mark the white tab as cable "A". Connect the remaining cable and mark it as cable "B".

FIGURE 3.3 FCC Cabling

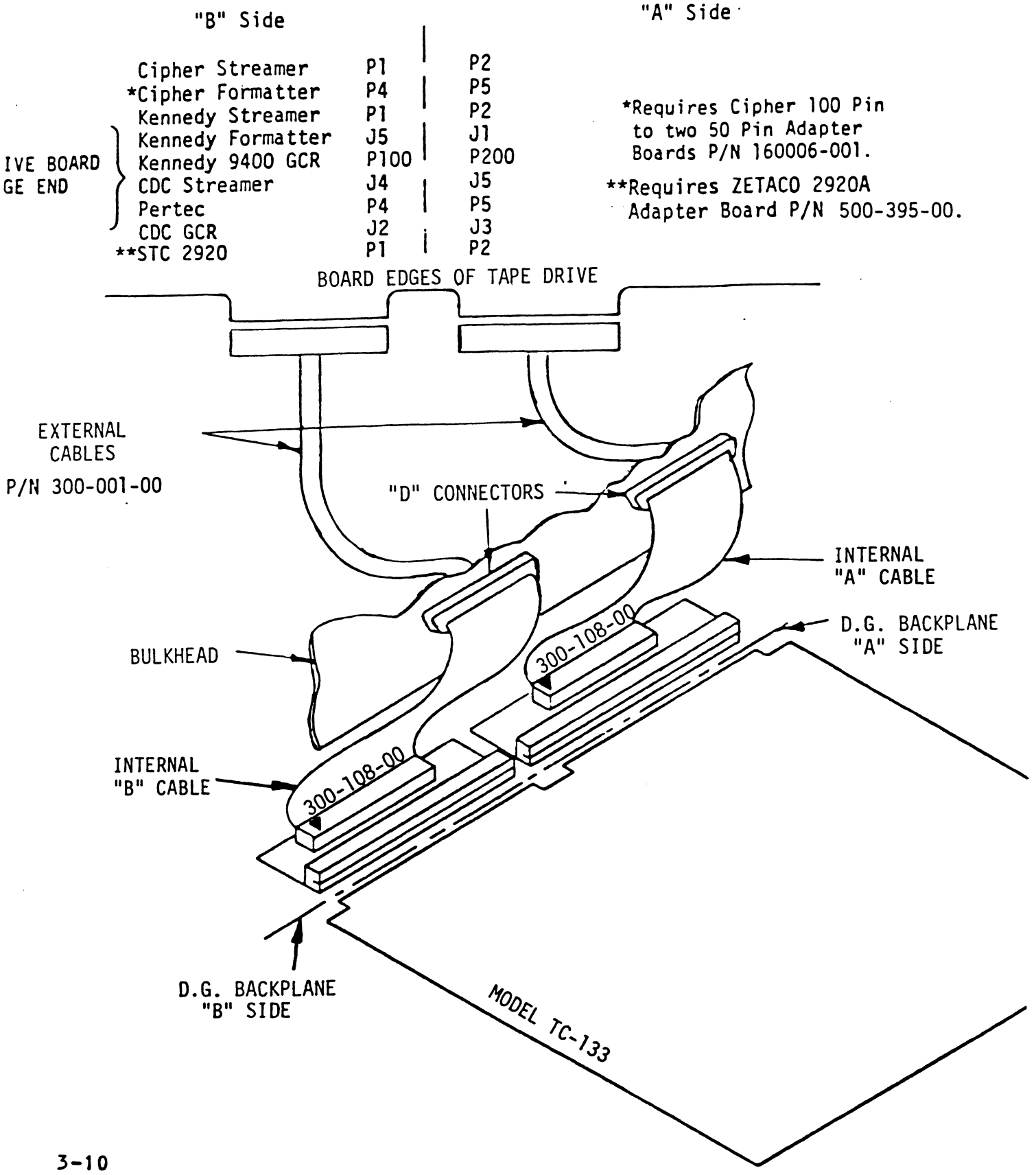

4.0 DIAGNOSTIC SUPPORT PACKAGE (DSP)

4.1 DSP GENERAL INFORMATION

The Diagnostic Support Package includes a Diagnostic Program, a Reliability Program and Utilities that will set a streaming tape to certain pre-defined values. This section describes how to boot programs from this tape and how to load these programs onto your system disk. The operation of Diagnostics and Reliability are also described here. Please refer to the System Guidelines in Section 8 for information on the streaming mode utilities.

4.1.1 BOOTSTRAP PROCEDURES

1. Mount the 400-242-00 DSP Tape on your tape drive and put the drive on-line. Be sure that the BPI setting matches the tape that you received. If your CPU has a tape drive other than the one you are testing, you can use it to boot from.

2. Program Load - The method of Program Load varies for different processors. Some of the possibilities are described here.

   If your system has front-panel switches, set them to 100022 when loading from the primary tape drive, or to 100062 when loading from the secondary drive. Then press the Program Load switch.

   For the S140 virtual console, set 11A to 100022 for the primary tape drive, or 100062 for the secondary tape drive. Then enter 100022L or 100062L.

   For the S120 Virtual Console, enter 22H for the primary tape drive or 62H for the secondary tape drive. For a Point 4 Virtual Console, set the switches on the CPU board and then enter P22 or P62 for the secondary drive.

3. 400-242-00 Menu Display is:

```
File #      Program

  2         TC-133 COUPLER DIAGNOSTIC
  3         UNIVERSAL MAG TAPE RELIABILITY
  4         TAPEMODE (STAND-ALONE)
  5         ".SV & .LS" Files and any Utilities in
            RDOS DUMP Format
  6         ".SV & .LS" Files and any Utilities in
            AOS DUMP Format

File Number?
```

You should enter the number of the program you wish to run. The last item on the menu is a description of the dump files contained therein, rather than an executable program.

4.1.2 LOADING PROGRAMS ONTO DISK

The last file on the DSP tape is an RDOS dump format of the previous files, along with some streaming mode utilities. This allows you to load the programs onto your disk. We encourage you to transfer the programs to some media other than 1/2 inch tape as soon as you can. If you have only one tape drive in your system, this will prevent having to load programs from a suspect tape drive at some later time. The following CLI commands can be used to perform the load:

For RDOS -

```
DIR %MDIR%
INIT MT0
LOAD/A/R/V MT0:5
RELEASE MT0
```

For AOS -

```
SUPERUSER ON
DIR :
LOAD/V/R @MTA0:6
REWIND @MTA0
SUPERUSER OFF
```

The files can now be booted from disk. For RDOS enter the program name in response to FILENAME?. For AOS enter the full pathname (including .SV) in response to PATHNAME?.

4.2 DIAGNOSTICS

The Diagnostic Program is provided to find failures that are related to the basic operations of tape control. The diagnostic assumes the magnetic tape media is not the cause of errors. You should use a good scratch tape for the testing. In the interest of saving time during the EOT portion of diagnostics, it is a good idea to use a small tape reel.

A. Boot the Diagnostics Program (MT133D) from tape 400-242-00 or disk. You should see the following:

```
-            MT133D  -  REVISION N
-   133 Tape Coupler Diagnostics
-   Product of ZETACO
-   Please mount a write-enabled error free scratch tape.
-   Only the drive you are testing can be on-line.
-   Press any key to continue.
```

B. Load a scratch tape on the drive being tested, put the drive on-line and then press RETURN. Program displays:

```
-   Enter drive unit number:
```

C. After you have entered the unit number, the program will display:

```
-   Specify the ZETACO model number of the unit being
    tested.
-   (6021 = 0 or 6125 = 1):
```

If you have a Model TC-133 (6021 emulation), enter 0.

If you have a Model TC-133A (6125 emulation), enter 1.

D. Next you should select the recording mode to be tested:

```
-   If the drive is set for NRZ (800 BPI), enter 0;
    otherwise enter 1.
```

E. As the tape drive can be either the primary or the secondary device, you must enter the device code:

```
-   Enter device code [22]:
```

F. The last request before the tests are executed is:

```
-   Set switch register to the desired value, then
    press RETURN to continue.
```

G. If you wish to set any switches, refer to the program text file in the back of the manual. To proceed with the test, you must enter RETURN (NEW LINE will not do it).

H. When diagnostics have successfully run, the word CYCLE, followed by PASS #, will display. When errors are encountered, an explanation will be displayed and the program will loop on the error. To continue beyond the error, turn on Switch 1.

4.3 RELIABILITY

The Reliability Program is provided to find intermittent and pattern sensitive problems.

A. Load the program from 400-242-00 tape or disk. (See DSP General Information.) Program displays:

- UMTR - Release N
- Universal Mag Tape Reliability
- Product of Zetaco

- Starting Addresses:

- 500-Reliability Test
- 501-Interchange Test (WRITE/READ)
- 502-Interchange Test (READ ONLY)
- 503-Command String Interpreter
- 504-Error Log Printout

- Set Switch register to desired value, then press RETURN to continue.

B. Load scratch tape on all drives to be tested. Press RETURN (not NEW LINE). You will be asked to specify the model number of your tape coupler:

- Specify the ZETACO Model number of the unit(s) being tested.
- (110=1, 120=2, 133(6021)=3, or 133(6125)=4):3

C. You should enter 3 if the Coupler is a 133 (6021 emulation), or 4 if it is a 133A (6125 emulation). All the drives being tested must be at the same device code.

- Enter device code [22]:

D. Enter the device code. Program then asks:

- Enter 0 to test CRC (NRZI only), otherwise enter 1.

E. Specify the recording mode. Program then asks:

- Enter 1 if the Controller will be run in an AOS system, otherwise enter 0.

F. The last message reminds you to mount your scratch tapes:

   - Mount scratch tape(s). Press RETURN to continue.

G. Press RETURN (not NEW LINE). The Reliability tests will begin. While the program is running, you should press the SPACE BAR to display the current statistics of READS, WRITES and ERRORS.

4.4 UTILITY PROGRAMS

The Utility Programs in the DSP for 400-242-00 all concern streaming mode drives. If you have a streaming tape, you should read the System Guidelines in Section 8 for information on optimizing the performance of the drive.

5.0 TROUBLE-SHOOTING

Self-test tests all the internal functions of the Tape Coupler once for every time power is applied to the board. The test takes approximately 14 seconds to complete. If Self-test passed, the red LED will go out. If a failure was detected, the LED will blink a repetitious code indicating which circuit on the board has a problem. Looping on error is achieved by depressing the I/O reset switch while the error code is being reported. Reference Table 5.1, Self-test Error Codes.

TABLE 5.1 Self-test Error Codes

CODE	TEST	POSSIBLE FAILURE	SHEET # OF PRINTS
1	Micro Processor Ram Test	Read data did not compare with what was written 6810 (238 x 8 Ram)	8
4	FIFO Buffer Test	The READ data did not compare with what was written. 2114's (1024 x 8 Ram)	13,14,15 16,17
5	Address Turnover Test	Address turnover flip-flop did not set when expected. (Should set after 1024 RD/WT buffer references	14
7	Data Late Test	Data late flip-flop was set on power on or it did not set after one more reference with a full buffer	14
8	EPROM Check Sum	Check sum calculation did not agree with the data in the check sum location (replace EPROM)	8

Any command issued to the Tape Coupler will cause Self-test to abort and if not aborted, the Coupler will appear not ready to the system until Self-test successfully completes.

CAUTION: When using questionable or marginal tape on GCR models you may encounter bad records. Ensure any bad tapes are clearly marked. We recommend using high quality 6250 certified tape.

5.1 CUSTOMER SUPPORT HOTLINE

ZETACO, Inc. provides a Customer Support Hotline (612-890-5135) to answer technical questions and to assist with installation and trouble-shooting. The Hotline is manned by a technical team from 8:00 a.m. to 5:00 p.m. (Central Time) Monday through Friday.

To facilitate over-the-phone trouble-shooting, please fill out the checklist on the following page before placing your call.

5.2 PRODUCT RETURN AUTHORIZATION

When Coupler malfunction has been confirmed using the tests outlined, the board can be returned to ZETACO for warranty repair or for time-and-material repair if the product has been damaged or is out of warranty. A Return Material Authorization (RMA) number is required before shipment and should be referenced on all packaging and correspondence.

To ensure prompt response, the information outlined in the Material Return Information form on the following page should be gathered before calling the ZETACO Hotline for the RMA number. Please include a completed copy of the Material Return Information form with the product. Each product to be returned requires a separate RMA number on the shipping label.

5.3 WARRANTY INFORMATION

All ZETACO Controllers and Couplers are warranted free from manufacturing and material defects, when used in a normal and proper manner, for a period of up to two years from date of shipment. Except for the express warranties, stated above, ZETACO disclaims all warranties including all implied warranties of merchantability and fitness. The stated express warranties are in lieu of all obligations of liabilities on the part of ZETACO for damages, including but not limited to special, indirect or consequential arising out of or in connection with the use or performance of ZETACO's products.

MATERIAL RETURN INFORMATION

All possible effort to test a suspected malfunctioning Coupler should be made before returning the Coupler to ZETACO for repair. This will: 1) determine if the board is actually defective. 2) increase the speed and accuracy of a product's repair, which is often dependent upon a complete understanding of the user's checkout test results, problem characteristics, and the user system configuration. Test results for the Coupler should be obtained by performing the tests below. (Use back of page if more space is needed.)

TEST	RESULT
MT 133D DIAGNOSTIC	_____
UMTR RELIABILITY	_____

Other tests performed (system operation, errors, etc.):

Please allow our service department to do the best job possible by answering the following questions thoroughly and returning this information with the malfunctioning board.

1. Does the problem appear to be intermittent or heat sensitive? (If yes, explain.)

2. Under which operating system are you running? (AOS, RDOS, DDOS, DTOS).

3. Describe the system configuration, (i.e. peripherals, controllers, model of computer, etc.).

4. Has the coupler been returned before? Same problem?

To be filled out by CUSTOMER:

Model #:_____
Serial #:_____
RMA #:_____ (Call ZETACO to obtain an RMA number.)

Returned by:

Your name: _____
Firm: _____
Address: _____
Phone: _____

6.0 PROGRAMMING NOTES

CAUTION: When using questionable or marginal tape on GCR models you may encounter bad records. Ensure any bad tapes are clearly marked. We recommend using high quality 6250 certified tape.

6.1 INSTRUCTION FORMAT

Symbolic Form for I/O Instructions

DXXF AC,MTA

DXX = DOA, DOB, DOC, DIA, DIB

F = FUNCTION: C (CLEAR) - Clear all error flags (except EOT/BOT) and done and busy flip-flops. If for some chance the system issues a clear pulse during the command operation, the Coupler will abort the command and done will not set.

S (START) - Clears all errors except illegal, set busy and clear done. Command that was issued by a DOA will be executed.

P (PULSE) - Not used.

AC = ACCUMULATOR: 0, 1, 2 OR 3

MTA = DEVICE CODE: PRIMARY - 22 OCTAL
SECONDARY - 62 OCTAL

BINARY REPRESENTATION

0	1	2	3	4	5	6	7	8	9	10	11	12	13	14	15
0	1	1	AC		OP CODE		FUNC		DEVICE CODE (MTA)						

INTERRUPT MASK BIT = 10

6.1.1 SKIP INSTRUCTIONS

Used to poll the state of the Coupler (command is DONE or BUSY). If the skip condition is met the next instruction is skipped, otherwise the next instruction is executed.

SKPBZ MTA - SKIP IF BUSY FLIP-FLOP IS CLEAR.
SKPBN MTA - SKIP IF BUSY FLIP-FLOP IS SET.
SKPDZ MTA - SKIP IF DONE FLIP-FLOP IS CLEAR.
SKPDN MTA - SKIP IF DONE FLIP-FLOP IS SET.

6.2 DOA - SEND COMMAND

DOAF AC,MTA

0	1	2	3	4	5	6	7	8	9	10	11	12	13	14	15
0	1	1	AC			0	1	0	F	DEVICE CODE					

AC

0	1	2	3	4	5	6	7	8	9
NOT USED					STREAMER MODE	EDIT MODE	DENSITY SELECT	RESERVED	EVEN PARITY

10	11	12	13	14	15
COMMAND (0-7)			UNIT SELECT (0-7)		

UNIT SELECT: USED TO SELECT ONE OF A POSSIBLE EIGHT TAPE DRIVES

0 - READ
1 - REWIND
2 - NOT USED
3 - SPACE FORWARD
4 - SPACE REVERSE
5 - WRITE
6 - WRITE END OF FILE
7 - ERASE

The command and unit select will default to READ and unit zero after a clear pulse or IORESET.

The Coupler may address up to eight tape drives but only one command can be done at a time with the exception of REWIND.

STREAMER MODE SELECT BIT 5 = 0

5	6	7	8	9
0	EDIT	DEN	RES	EVEN

EDIT MODE (BIT 6) - Use to re-write records within blocks. This bit is an option. It is generally not necessary unless the tape unit is a primary storage device or key to tape applications.

DENSITY SEL (BIT 7) (Disregard for RDOS, see Jumper (J3) Table Section 3.2.3) - Used when Controller is connected to a dual formatter board. Selects PE if one, NRZI if zero. The formatted drive must accommodate this feature as well.

(BIT 8) - Reserved

EVEN PARITY (BIT 9) - Maintenance Use Only

STREAMER MODE SELECT BIT 5 = 1

5	6	7	8	9
1	LIMIT 1	LIMIT 0	HIGH SPEED	DYNAMIC GAP

Applicable to streamers only.

NOTE: It is not necessary to re-issue streamer mode select if the same configuration is desired for successive commands. A start pulse is not required to select the streamer mode.

HIGH SPEED (BIT 8) - If set to a one, select high speed tape motion (100 IPS). If this bit is zero, low speed will be selected.

DYNAMIC GAP (BIT 9) - If set to a ONE, write dynamic inter-record written. This increases the re-instruct period. It should be noted that a loss of usable data media may result with this command. If this bit is ZERO, nominal inter-record gap is selected.

NOTE: If the Cipher F880 Microstreamer is selected, the gap will dynamically be lengthened depending upon when the next command is issued. The Kennedy 6809 Streamer will lengthen the gap by an additional .6 inch, thereby increasing the re-instruct period by 6 milliseconds.

If a Cipher Streamer is used, gap length limits (Bits 6 and 7) can be established by the controller. This may be useful if there is long time intervals occasionally before the next write command is issued (between 1 and 4 seconds). The time limits could prevent outrageously long record gaps. If the selected limit is not met, the unit will simply reposition back to a nominal gap length. The following table indicates the re-instruct limits.

LIMIT TABLE

BIT 6	BIT 7	
LIMIT 1	LIMIT 0	LIMIT (MS = MILLISECONDS)
0	0	75 MS
0	1	150 MS
1	0	300 MS
1	1	RESERVED

These modes, high speed and dynamic gap, will remain as selected until another DOA with streamer mode select (BIT 5) = 1 is issued again. The default condition is normal gap and low speed. Default is established upon POWER-ON or IORESET switch depressed.

6.3 DOB - LOAD STARTING MEMORY ADDRESS

DOBF AC,MTA

0	1	2	3	4	5	6	7	8	9	10	11	12	13	14	15
0	1	1	AC		1	0	0	F			DEVICE CODE				

AC

0	1	2	3	4	5	6	7	8	9	10	11	12	13	14	15
0	CONTENTS OF SELECTED ACCUMULATOR														

The contents of Selected Accumulator will be loaded into the Controller's address counter. This will become the starting address for the next command that requires the data channel (READ or WRITE).

6.4 DOC - LOAD WORD COUNT

DOCF AC,MTA

0	1	2	3	4	5	6	7	8	9	10	11	12	13	14	15
0	1	1	AC		1	1	0	F			DEVICE CODE				

AC

0	1	2	3	4	5	6	7	8	9	10	11	12	13	14	15
EXT. REC. LENGTH OPT.								CONTENTS OF SELECTED ACCUMULATOR							

Jumper option on word counter allows record sizes of up to 64K (not standard with RDOS software).

Program must place two's complement of desired word count into selected accumulator before this instruction is executed.

Spacing Forward/Reverse - Place two's complement of the maximum number of records to be spaced.

6.5 DIA - READ STATUS

DIAF AC,MTA

0	1	2	3	4	5	6	7	8	9	10	11	12	13	14	15
0	1	1	AC		0	0	1	F			DEVICE CODE				

AC

0	1	2	3	4	5	6	7
ERROR FLAG	DATA LATE	RE-WINDING	IL-LEGAL	DENSI-TY	PARITY ERROR	END OF TAPE	FILE MARK

8	9	10	11	12	13	14	15
LOAD POINT	9 TRK	BAD TAPE	ID STATUS	CORRECT-ED ERROR	WRITE LOCK	ODD REC READ	UNIT READY

Bits 11 and 12 are for phase encoded only.

STATUS BITS:

0 ERROR FLAG - A condition was detected by the controller board that may require attention. If Bit 1, 3, 5, 6, 7, 8, 10 or 14 are a one, the error flag will be set to a one.

1 DATA LATE - Data Channel requests were not honored in time to keep up with device, resulting in one or more lost data words. This condition will not occur until the FIFO buffer overflows.

2 REWINDING - Selected unit is rewinding.

3 ILLEGAL - A start function is asserted under one of the following cases:

1) Write protect is on (no write ring installed and the command that was issued prior to the start was a write, erase or write file mark.

2) Space reverse command was issued and unit is at load point.

3) Unit is not ready.

NOTE: No tape motion will take place and DONE will set. Only clear function or IORESET will clear illegal.

4 DENSITY - Always a one in a standard configuration. May be optionally used to differentiate between PE mode (one) or NRZI mode (zero) if controller is connected to a dual embedded formatter.

5 PARITY ERROR - One of two conditions possibly occurred. Even vertical parity was detected by the controller or a corrected error occurred during a WRITE command.

6 END OF TAPE - The selected unit is at or beyond the EOT mark. A SPACE REVERSE or REWIND command will clear this bit.

7 FILE MARK - Will be set to a one when the unit detects the presence of a file mark during a WRITE file mark command (READ AFTER WRITE) or when a READ or SPACING command passes over a previously written file mark.

8 LOAD POINT - Selected unit senses a load point marker (BOT).

9 9 TRACK - Always a one.

10 BAD TAPE - Set to a one by the occurrence of one of the following cases:

1) PE only, did not detect an ID burst when reading from load point.

2) PE only, tape was in a runaway condition (reading an erased tape).

3) PE only, multi-track dropout.

4) PE only, uncorrectable parity error.

5) PE only, non-zero character in postamble.

6) Excessive skew.

7) PE only, loss of data envelope prior to postamble detection.

8) Vertical parity on cable in error.

9) NRZ only, vertical parity error on data character.

10) NRZ only, longitudinal parity error.

11) NRZ only, CRCC parity error.

12) NRZ only, improper record format.

13) NRZ only, CRC error.

RETRIES MAY CORRECT THE ABOVE PROBLEMS

11 ID BURST - PE only, set to one if the unit detects an identification burst on a forward motion command from load point.

If detected during a READ command, the tape media was written by a phase-encoded transport.

A WRITE command (write or write file mark) issued at load point will cause the unit to automatically write an ID Burst.

12 CORRECTED PAR ERROR - PE only, if this bit is a one after a WRITE command, the parity error flag will also be set to a one and the software should backspace and re-write the record.

If it occurs after a READ command, it is not necessary to re-read the record, the error is probably caused by the media itself (such as dust, slightly damaged tape or it was poorly written), and the data has been corrected.

13 WRITE PROTECT - A write ring was not installed on the tape reel.

14 ODD RECORD READ - An odd number of characters were read within the record.

15 READY - The selected tape unit is ready. The following conditions must be satisfied before this bit is a one:

1) Unit is online.

2) Not rewinding.

3) Controller is not busy.

4) Ready line from unit must be received.

5) Self-test is done.

6.6 DIB - READ CURRENT ADDRESS

DIBF AC,MTA

0	1	2	3	4	5	6	7	8	9	10	11	12	13	14	15
0	1	1	AC		0	1	1	F				DEVICE CODE			

AC

0	1	2	3	4	5	6	7	8	9	10	11	12	13	14	15
0	CURRENT CONTENTS OF THE ADDRESS COUNTER														

The selected accumulator will contain the current contents of the address counter after the execution of this instruction.

READ WRITE RECORD - Contains the memory address to where the next data word transfer will take place. The memory address counter is incremented by one after each data channel transfer.

SPACING FORWARD/REVERSE - The address counter becomes a record counter on a space forward or reverse command. The difference between the contents of the counter before and after the space command will indicate the number of records spaced over.

6.7 DIC - READ CHECK CHARACTERS (MAINTENANCE USE ONLY)

DICF AC,MTA

0	1	2	3	4	5	6	7	8	9	10	11	12	13	14	15
0	1	1	AC		1	0	1	F		DEVICE CODE					

AC

0	1	2	3	4	5	6	7	8	9	10	11	12	13	14	15
			CRCC									LRCC			

This command is useful for testing to make sure that an NRZ drive is generating the proper check characters. The check characters will be available (NRZ Only) after every read record command. This command will only be necessary in use with check characters, a DIC will simply transfer the last two characters read from a record into the selected accumulator.

6.8 COMMAND DESCRIPTIONS

6.8.1 READ

DOA Command is read and a start pulse was issued.

START sets BUSY, the Coupler then sends a Read Forward command to the tape unit. Tape unit will ramp up to speed and transfer data to the coupler when it reaches the data field. Every two bytes sent by the unit will be transferred to the mini's memory as one complete word. After the transfer the address and word counter will increase by one. Tape motion will continue until a record GAP is reached (unless "ON THE FLY" is achieved). Word transfer to the mini continues until the word count limit is met or the last word of the record is sent via the data channel.

If the record is a file mark, tape motion will cease and no data transfers on the data channel will take place.

DONE will set when the command is finished or an error has occurred.

Possible Errors:

1) Selected unit is not ready (rewinding, off line coupler busy or drive not in system.

2) Hard or corrected error.

3) Data Late.

NOTE: READ/LOOK-AHEAD FEATURE

The probability of one READ record command following another is very high. To take advantage of this likelihood, the TC-133, once a Read command is received, will issue a second READ command to the drive. This feature dramatically increases the amount of time that the minicomputer has to issue the actual READ command. (The gap length, record postamble and 1024 character buffer is what contributes to the extend time.)

If the next command was not a READ, the Coupler will abort the Read/Look-Ahead, reposition the tape, and execute the desired command.

In all cases the Read/Look-Ahead feature is transparent to the User. It is accomplished automatically by the Coupler.

6.8.2 WRITE

A WRITE command is issued by doing a DOA with a Start Pulse.

BUSY sets and the Coupler asserts a Write Forward command to the tape unit. Tape unit ramps up to speed and continues to write bytes of data until the word count limit is reached and the FIFO is empty. Data Channel operation is the same as a READ, except words are read from the mini's memory instead of written after the last byte is written. The tape unit will write its format data (postamble if PE, CRC/LRC is NRZ) and record gap if "ON THE FLY" is not achieved, tape motion will cease.

DONE will set when the command is finished or an error has occurred.

Possible Errors:

1) Same as READ command.

NOTE: Since, normally, a READ or WRITE Command will ultimately result in Data Channel activity, it is imperative that the word counter (DOC) and address counter (DOB) are initialized prior to the Start Pulse.

6.8.3 WRITE END OF FILE

START will set BUSY (ILLEGAL and DONE set if no write ring) and the tape unit will move forward and write one file mark.

PE FORMAT - A gap approximately 3.5 inches long before the file mark followed by a record gap.

NRZ FORMAT - A single character record with bits in tracks 3, 6 and 7 set for both the data character and the LRCC. The CRC character will contain all zero bits.

DONE sets when the command is completed.

6.8.4 REWIND

START does not set BUSY, selected tape unit will rewind at high speed. The unit will not be ready until the tape is stopped at the BOT marker. Other units are available for commands while this unit is rewinding. DONE does not set when command is completed.

6.8.5 SPACE FORWARD

When START sets BUSY, forward tape motion starts. When unit reaches a record gap the Coupler then makes the decision whether to continue onto the next record gap or to stop tape motion. It will stop under any of the following conditions - word count overflowed, file mark was detected or last record spaced contains EOT marker. The word counter should be loaded with two's complement of the desired number of records to be spaced prior to Start Pulse. The maximum number of records to be spaced is 4095 (64K is optional). DONE will set after command completion and the file mark status bit will be set if a file mark was encountered. If the drive is a streamer type, high speed will be selected automatically after four records. This greatly increases file access time.

6.8.6 SPACE REVERSE

START sets BUSY. If the selected tape unit is at load point, no tape motion will take place. DONE and ILLEGAL will set. If not at a load point, tape motion will continue until the word count overflows, a file mark is encountered or load point is reached. The word counter is handled the same way as the space forward command. When the command is completed, DONE will set. If the Coupler is connected to a streamer type of drive, high speed will be selected automatically after ten records.

6.8.7 ERASE

When START sets BUSY and a write ring is on the reel, the tape unit will erase approximately 3.5 inches of tape. The amount of tape erased varies somewhat with different drive manufacturers. Refer to the drives manual for the actual amount. DONE sets when the command is completed.

6.9 DATA CHANNEL OPERATION (RESULTING FROM A READ/WRITE COMMAND)

Data Channel Operations take place during a READ Record (providing an end of file is not encountered) or Write Record. The word counter and address counter must be initialized before a START function (DXX S AC,MTA) is asserted (see 6.3 DOB and 6.4 DOC). If a legal (see DIA Status Bit 3) READ or WRITE command was issued prior to a START function, tape motion will commence. Data transfers will be encountered between the minicomputer and the magnetic tape drive. One data channel request is issued for every word (16 bits) transfers on the drive end. If the mini cannot respond to a request before the next word is transferred by the drive, the Coupler will store it into a FIFO buffer until the request is acknowledged. The size of the buffer covers the data channel latency period. But, if for some remote chance that the buffer overflows, the Coupler will then abort the command and set DONE, ERROR FLAG and DATA LATE (see 6.5 DIA). For each word transferred via the data channel, the word counter and address counter will increase by one data channel. Transfers will continue until the word counter overflows or an end of record is reached on a READ command. A maximum word count may be used for a READ command if the record size is unknown.

7.0 STREAMING MODES

The most important issue when referring to streaming, is the term "RE-INSTRUCT PERIOD". This is the amount of time the specific mag tape drive gives the controller to assert the next command before tape motion stops. If the next command issued (provided it is of the same type and direction) is met, tape motion will continue at the same rate for the next record. This is normally referred to as "ON THE FLY" operations.

If "ON THE FLY" is not established, then it is referred to as start/stop action (tape motion ceases within record gaps). With vacuum column or tension arm mag tape drives, start/stop times are rather fast in the order of about 8 milliseconds. However, with streamer drives, the high cost mechanisms necessary for fast start/stop ramp times are eliminated. Hence, start/stop times may take more than one second. If the next command is not issued during the re-instruct period with a streamer drive, it will then enter what is called a repositioning cycle. This cycle is necessary because the streamer cannot stop within the nominal inter-record gap length (approx. .6 inches). Therefore, after it decelerates forward it must accelerate in reverse, and finally decelerate in reverse. The repositioning cycle is longer the faster the tape speed, therefore, most streamers offer a low speed (25 IPS or 12.5 IPS) along with the high speed (100 IPS).

If the program that is controlling the data transfers to the mag tape does not issue commands during the normal re-instruct period, repositioning takes place. Options are available to remedy this situation to extend the re-instruct period. One option would be to use a lower speed. Another would be to lengthen the record gap after a WRITE command, but this would sacrifice media (which may prove to be useful providing the gaps are not too long).

7.1 RE-INSTRUCT TABLE

CIPHER RE-INSTRUCT TIMES:

SPEED	GAP LENGTH	RE-INSTRUCT TIME
25 IPS	NORMAL (.6")	16 MS
100 IPS	NORMAL (.6")	4 MS
25 IPS	VAR. LENGTH	UP TO 4 SEC.
100 IPS	VAR. LENGTH	UP TO 4 SEC.

KENNEDY RE-INSTRUCT TIMES:

SPEED	GAP LENGTH	RE-INSTRUCT TIME
12.5 IPS	NORMAL (.6")	START/STOP ONLY
100 IPS	NORMAL (.6")	4.5 MS
100 IPS	LONG GAP (1.2")	10.5 MS

8.0 SYSTEMS GUIDELINES

8.1 SYSGEN CONSIDERATIONS

The user must correctly specify the Tape Coupler name at SYSGEN time. The correct Tape Name depends on the Operating System and whether you are running with the Coupler set as a 133(6021) or as a 133A(6125).

The situation is as follows:

RDOS SYSGEN
- ZETACO Tape Coupler 133(6021) is MTX.
- ZETACO Tape Coupler 133A(6125) is not supported.

AOS SYSGEN
- ZETACO Tape Coupler 133(6021) is MTA.
- ZETACO Tape Coupler 133A(6125) is MTC.

Other
- ZETACO Tape Coupler 133(6021) should be the same as the emulation 6021.
- ZETACO Tape Coupler 133A(6125) should be the same as the emulation 6125.

8.2 STREAMING MODE UTILITIES

ZETACO provides utility programs that can help optimize the performance of streaming tape drives. These utilities are supplied on the 400-242-00 tape from ZETACO, Inc. Please refer to Section 4 for information on loading these programs onto your disk. For Cache and Start/Stop drives, more than one drive daisy-chained to the Coupler, or a utility other than a backup, these utilities are not useful and you should skip the rest of this section unless you have a streaming tape drive.

To decide how and when you want the streaming mode set, refer to the Performance Chart at the end of this section. For a particular System Tape Routine and your drive speed, the Chart shows the most efficient set of parameters to select. The programs described in the remainder of this section will set the tape speed and inter-record gap to pre-defined values. The default settings are low speed and nominal gap. Be aware that resetting the CPU will cause any tape settings to be lost. Thus, any time the CPU is reset it is initially set for low speed and nominal gap.

8.2.1 RDOS EXECUTABLE UTILITIES

There are five utility programs that run under RDOS.

The programs will set the tape drive as follows:

```
LNG     = Low Speed, Nominal Gap
LDG75   = Low Speed, Dynamic Gap 75 MS, Min Gap Nominal
HNG     = High Speed, Nominal Gap
HDG75   = High Speed, Dynamic Gap 75 MS, Min Gap Nominal
HMG90   = High Speed, Dynamic Gap 300 MS, Min Gap 90 MS
```

There are three files associated with each of these programs: Executable Program File (-.SV); a Text File (-.TX), which describes the most recent configuration; and a Command Line File (-.MC), which runs the program and displays the configuration.

You must first load these programs from the 400-242-00 tape onto your disk. After determining which program you want to run, just enter the program name.

8.2.2 AOS EXECUTABLE UTILITIES

There are five utility programs which run under AOS. The programs will set the tape drive as follows:

```
LNG     = Low Speed, Nominal Gap
LDG75   = Low Speed, Dynamic Gap 75 MS, Min Gap Nominal
HNG     = High Speed, Nominal Gap
HDG75   = High Speed, Dynamic Gap 75 MS, Min Gap Nominal
HMG90   = High Speed, Dynamic Gap 300 MS, Min Gap 90 MS
```

There are three files associated with each of these programs: Executable Program File (-.PR), a Text File (-.DC) which describes the most recent configuration, and a Command Line File (-.CLI) which runs the program and displays the configuration.

You must first load these programs from the 400-242-00 tape onto your disk. After determining which program you want to run, just enter the program name.

8.2.3 STAND-ALONE UTILITY

TAPEMODE is a stand-alone utility that configures the Coupler without having to use an Operating System. This is useful prior to running DG stand-alones, such as PCOPY. TAPEMODE will configure the TC-133 Coupler to any desired configuration.

To use TAPEMODE, load the program from 400-242-00 tape or disk (see DSP General Information, Section 4). First you must answer the questions to configure the Coupler as desired. After the tape has been configured, TAPEMODE asks for the device code for re-booting. The auto-boot function is provided to prevent the operator from inadvertently cancelling the configuration (RESET switch).

8.2.4 OTHER OPERATING SYSTEMS

The user must create programs to configure the Coupler or a specific configuration must be added to the drivers. A Data Out A (DOA) instruction with the desired configuration bits set in the proper accumulator is all that is needed to configure/re-configure the Coupler. The DOA instruction is fully described in Section 6.2.

8.3 USER-WRITTEN PROGRAMS

If you have non-DG tape utilities that do not keep the drive streaming (drive repositions), then the following could be done.

For Streaming on Writing	- Increase gap dynamically
For Streaming on Read	- Increase minimum gap length when writing
If in High Speed	- Switch to low speed

NOTE: Increasing the gap length will use additional tape.

8.4 PERFORMANCE CHART

		25/100 TAPE	12.5/100 TAPE
RDOS	MDABS MDSAVE ETC.	Low Speed Nominal Gap	Low Speed Nominal Gap
RDOS	XFER	Low Speed Dynamic Gap 75 MS	Low Speed Nominal Gap
RDOS	DUMP LOAD	Low Speed Dynamic Gap 75 MS	Low Speed Nominal Gap
RDOS	FDUMP FLOAD	Low Speed Nominal Gap	Low Speed Nominal Gap
RDOS BURST	DUMP LOAD	High Speed Dynamic Gap 75 MS	High Speed Dynamic Gap 75 MS
AOS	COPY	Low Speed Nominal Gap	Low Speed Nominal Gap
AOS	DUMP LOAD	Low Speed Dynamic Gap 75 MS	Low Speed Nominal Gap
AOS PCOPY		High Speed Nominal Gap	High Speed Nominal Gap

```
MT13D   AOS ASSEMBLER REV 04.20         12:52:16 03/27/84
        ;
        ;
        ;*************************************************************
        ;
        ;
        ;
        ; DESCRIPTION: MT133 TAPE COUPLER  DIAGNOSTIC
        ;
        ;
        ; PRODUCT OF ZETACO 1984
        ;*************************************************************
                .TITL   MT133D
000001          .DUSR   X=1
000001          .NOMAC  X
000000          .TXTM   0
                ;1.     PROGRAM NAME: MT133D.SR
                ;2.     REVISION HISTORY:
                ;
                ;               REV.      DATE
                ;               00      03/24/81
                ;               01      05/27/81        DISK BOOTABLE
                ;               02      12/10/81        ALLOW FOR STATUS OF OTHER
                ;                                       DRIVES
                ;               03      03/25/82        KSS
                ;               04      06/20/83        GET RID OF AUTO INC STUFF
                ;       (PREL.) 05.00   08/83           -UPGRADE TO USE DTOS REV 6.
                ;                                       SOME TESTS RUN DIFFERENTLY.
                ;                                       (BUILT FROM MT110D PROGRAM)
                ;                                       -ID BURST NO LONGER REQUIRED
                ;                                       ON FE NOR EXCLUDED ON NON-FE.
                ;                                       -MODS FOR 6125 EMULATION(133A):
                ;                                       BIT 11 (ID BURST) MUST = 0
                ;                                       DOB/DIB (TEST A4) USES ALL 16
                ;                                              BITS.
                ;               06      9/83            ------------------------
                ;                                       INCLUDE TEST NUMBER AND SUBTEST
                ;                                        CHARACTER FOR ALL TESTS.  USED
                ;                                        TO DISPLAY CURRENT TEST NUMBER
                ;                                        AND TO SUGGEST INSTALLATIONAL
                ;                                        OR OPERATIONAL CAUSES FOR SOME
                ;                                        ERRORS.  (SEE RTN SUGJEST.)
                ;                                       FIXED BUGS:
                ;                                       - WAIT EXPECTS THE IN-LINE PARM
                ;                                         TO BE DIRECT NOT INDIRECT.
                ;                                       - MODIFY ALL .MTA INSTRUCTIONS
                ;                                         WAS NOT DOING SO TO THE LAST
                ;                                         FEW INSTRUCTIONS.
                ;                                       - SOFT SW 1 ON SHOULD NOT FORCE
                ;                                         ERROR DISPLAY ON EACH ROUND.
                ;
                ;                                       - REVISED CAL?B (IN DLIB) TO
                ;                                         ALLOW FOR ANY OF 3 CLOCKS:
                ;                                         CLOCK 1,2 OR 3.  THIS PROGRAM
                ;                                         USING CLOCK 1 (10 HERTZ).
                ;                                       - MOVED MOST DATA TO END OF
                ;                                         LISTING SO THAT THE MODIFY
                ;                                         DEVICE CODE ROUTINE NOT DOING
                ;                                         STUFF TO DATA FIELDS.
                ;
```

```
;               07      03/22/84        ------------------------------
;                                       130 TO 133 AND PROPER DEVICE
;                                       CODE CHANGE ROUTINE.
;3.     MACHINE REQUIREMENTS
;       3.1     NOVA OR ECLIPSE FAMILY CPU'S.
;       3.2     MINIMUM OF 16K MEMORY.
;       3.3     ZETACO 133 (6021 OR 6125) MAG TAPE COUPLER BOARD,
;               WITH A FORMATTED TAPE DRIVE.
;       3.4     TELETYPE OR CRT AND CONTROLLER.
;
;4.     TEST REQUIREMENTS
;       N/A
;
;5.     SUMMARY
;       THIS PROGRAM IS A HARDWARE DIAGNOSTIC FOR THE ZETACO MODEL 133
;       (6021 OR 6125) TAPE CONTROLLER. THE DEVICE CODE CAN BE 20 THRU
;       76. ONLY ONE READY, WRITE ENABLED DRIVE CAN BE ON LINE AT A TIME.
;
;6.     RESTRICTIONS
;
;       ONLY ONE(1) DRIVE CAN BE ONLINE AT ANY TIME. THE DEVICE
;       CODE MUST BE 20 THRU 76. ALL RESPONSES TO PROGRAM REQUESTS
;       MUST BE ANSWERED PROPERLY TO CONTINUE THE SEQUENTIAL
;       TESTING OF THE TAPE DRIVE.
;7.     PROGRAM DESCRIPTION/THEORY OF OPERATION
;       7.1     INITIALIZATION
;               7.1.1   I/O MODULE INITIALIZED
;               7.1.2   TEST SELB LINE SET, IF LINE SET IR-
;                       RECOVERABLE ERROR. PROGRAM HALTS AT
;                       BHALT.
;                               1.      SELECT UNIT NUMBER
;                               2.      DEVICE CODE CHANGE
;                               3.      SET SOFT SWITCH REGISTER
;       7.2     PRELIMINARY TESTS
;               7.2.1   TEST A1 - TEST SYSTEM SELD LINE.
;               7.2.2   TESTS A2 AND A3 - TEST CONTROLLER BUSY
;                       AND DONE STATUS.
;               7.2.3   TESTS A4 THRU A8 - TEST FOR UNIT SELECT
;                       BY LOADING AND TESTING THE MEMORY
;                       ADDRESS REGISTER.
;               7.2.4   TESTS A9 THRU A14 - TEST FOR SETTING AND
;                       RESETTING OF BUSY AND DONE BY START
;                       COMMAND.
;       7.3     FIRST TAPE MOTION
;               7.3.1   TESTS A15 AND A16 - TEST REWIND AND
;                       ERASE OPERATION AND STATUS.
;       7.4     FIRST DATA TRANSFER
;               7.4.4   TESTS A20 AND A21 - TEST FOR TOTAL DATA
;                       DATA WRITE WITH INTERRUPT.
;               7.4.5   TEST A22 - TEST WRITE ODD PARITY.
;       7.5     STATUS BIT TESTS
;               7.5.1   TEST A24 AND A25 - TEST FOR ILLEGAL
;                       COMMAND STATUS BIT SETTING.
;               7.5.2   TEST A26 - TEST FOR EOF STATUS BIT
;                       SETTING.
;               7.5.4   TESTS A28, A30, A31,A32- TEST STATUS BITS
;                       AND MEMORY ADDRESS REGISTER DURING BACK
;                       AND FORWARD SPACING.
;       7.6     DATA TRANSFER TESTS
;               7.6.1   TEST A33  - TEST WRITE AND READ ODD PARITY.
```

7.6.2 TESTS A35 AND A36 - TEST WRITE AND READ WITH DIFFERENT WORD COUNTS.
7.6.4 TESTS A39 THRU A41 - TEST EOF WRITE AND READ.
7.6.6 TESTS A50 THRU A53 - TEST FOR SPACING ERRORS BY GENERATING NOISE WITH I/O COMMANDS.

7.7 WRITE LOCK TEST

THIS TEST DETERMINES IF WRITE RING OUT WILL DISABLE THE WRITE. THIS TEST IS ONLY PERFORMED DURING THE FIRST PASS AND CAN BE DELETED BY SETTING SOFT SWITCH REGISTER BIT 15.

7.8 END OF TAPE TEST

THIS TEST WRITES 4K BLOCKS FROM BOT TO EOT. DURING THE TAPE WRITE ALL ERROR STATUS CONDITIONS ARE MONITORED. WHEN THE EOT SENSOR IS DETECTED THE WRITE OPERATION IS TERMINATED AND THE TAPE IS COMMANDED TO REWIND. IF THE EOT SENSOR IS NOT DETECTED THE WRITE WILL CONTINUE UNTIL THE TAPE COMES OFF THE SUPPLY REEL. THIS TEST CAN BE DELETED BY SETTING SOFT SWITCH REGISTER BIT 14.

8. SOFT SWITCH REGISTER SETTINGS

SWREG 8

8.1 SWITCH OPTIONS

DIFFERENT SWITCH BITS AND THEIR INTERPRETATION AT LOCATION "SWREG" ARE AS FOLLOWS:

BIT	OCTAL VALUE	BINARY VALUE	INTERPRETATION
14(E)	00002	0	ENABLE WRITE TO EOT TEST
		1	INHIBIT WRITE TO EOT TEST
15(F)	00001	0	ENABLE WRITE LOCK TEST
		1	INHIBIT WRITE LOCK TEST

NOTE. SWITCH BITS 14 AND 15 CAN ONLY BE ENABLED DURING THE FIRST PASS OF THE DIAGNOSTIC. IF THE TESTS ARE TO BE PERFORMED AFTER THE FIRST PASS, THEY CAN BE DIRECTLY ENTERED.

9. OPERATING PROCEDURES

9.1 PROGRAM LOAD

LOAD THE PROGRAM BY USING THE BINARY LOADER.

9.2 STARTING ADDRESSES

200 DIRECT ENTRY TO OCTAL DEBUGGER(ODT)
500 START DIAGNOSTIC
501 DIRECT ENTRY TO WRITE LOCK TEST
502 DIRECT ENTRY TO WRITE TO EOT TEST

9.3 PROGRAM OPERATION

THE DIAGNOSTIC PROGRAM IS PROVIDED TO FIND FAILURES THAT ARE RELATED TO THE BASIC OPERATIONS OF TAPE CONTROL. THE DIAGNOSTIC ASSUMES THAT THE TAPE MEDIA IS PERFECT AND NOT THE CAUSE OF ANY ERROR.

YOU SHOULD LOAD THE PROGRAM FROM RELEASE TAPE M242. REFER TO APPENDIX A FOR INFORMATION ON PROGRAM LOADING. ONCE THE PROGRAM HAS LOADED THE FOLLOWING MESSAGE WILL DISPLAY:

```
;
;       -          MT133D RELEASE 7.0
;       -       TAPE COUPLER DIAGNOSTIC
;       -       PRODUCT OF ZETACO
;       -
;       - PLEASE MOUNT A WRITE-ENABLED ERROR FREE SCRATCH TAPE.
;       - ONLY THE DRIVE YOU ARE TESTING CAN BE ON-LINE.
;             PRESS ANY KEY TO CONTINUE.
;
;       THE TAPE UNIT NUMBER IS REQUESTED AS FOLLOWS:
;
;       - DRIVE UNIT #:
;
;       YOU SHOULD ENTER THE NUMBER OF THE UNIT YOU WANT TO TEST.
;       (0,1,2 OR 3)
;       ------------
;
;       THE NEXT REQUEST IS:
;
;       - IF DRIVE SET FOR NRZ (800 BPI), ENTER 0; OTHERWISE, ENTER 1.
;
;       YOU SHOULD ENTER 0 OR 1 IN ACCORDANCE WITH THE RECORDING MODE
;                        -----
;       SET FOR THE TAPE DRIVE.
;
;       YOU MUST NEXT RESPOND TO
;
;       - IF COUPLER IS A MT133 (6021 EMULATION), ENTER 0, FOR MT133
;       (6125 EMULATION), ENTER 1.
;
;       WHEN THE ZETACO MT133 COUPLER EMULATES DATA GENERAL'S 6125
;       TAPE UNIT, IT WILL WRITE RECORD LENGTHS UP TO 77777(OCTAL) AND
;       ALWAYS RETURNS BITS 11 AND 12 = 0 ON 91A.  DEPENDING ON WHICH
;       EMULATION YOU ARE TESTING, ENTER 0 OR 1.
;                                -------
;       NEXT YOU WILL NEED TO ENTER THE DEVICE CODE OF THE TAPE DRIVE.
;
;       - ENTER DEVICE CODE [22   ]
;                           --------
;       - SET SWITCH REGISTER TO DESIRED VALUE, THEN PRESS RETURN TO
;                                                          ------
;       CONTINUE.
;
;       REFER TO THE SWITCH OPTIONS IN THE MT133D PROGRAM LISTING IF
;       YOU WISH TO SET THEM.
;
;       IF YOU ARE RUNNING THE WRITE LOCK TEST, THE FOLLOWING MESSAGE
;       WILL BE DISPLAYED:
;
;       - REMOVE WRITE ENABLE RING.  DON'T STOP THE PROGRAM.
;
;       RESPOND BY DISMOUNTING THE TAPE, REMOVING THE WRITE RING, AND
;       REMOUNTING THE TAPE.  THE PROGRAM WILL AUTOMATICALLY CONTINUE.
;       VERY SHORTLY, THE PROGRAM WILL DISPLAY:
;
;       - PUT WRITE RING BACK ON TAPE.
;
;       WHEN THE LAST TEST HAS BEEN COMPLETED THE PROGRAM DISPLAYS:
;
;       - CYCLE
```

```
;       - PASS 1
;
;       THE PROGRAM WILL CONTINUE INDEFINITELY, ALTHOUGH THE WRITE LOCK
;       AND THE EOT TEST WILL ONLY BE PERFORMED ON THE FIRST PASS.
;
;10.    PROGRAM ERROR DESCRIPTION
;       10.1    PRELIMINARY TEST ERRORS
;               THE FOLLOWING IS A LIST OF PRELIMINARY CON-
;               TROLLER AND DRIVE ERROR MESSAGES.
;               10.1.1  BUSY AND DONE ERRORS
;       "SELD LINE NOT RESET BY IORST, PC = XXXXX"
;       "BUSY FLIP-FLOP NOT RESET ERROR, PC = XXXXX"
;       "BUSY FLIP-FLOP NOT RESET BY IORST, PC = XXXXX"
;       "BUSY FLIP-FLOP NOT SET ERROR, PC = XXXXX"
;       "DONE FLIP-FLOP NOT RESET ERROR, PC = XXXXX"
;       "DONE FLIP-FLOP NOT SET ERROR, PC = XXXXX"
;               10.1.2  CONTROLLER DATA TRANSFER ERRORS
;       "SEND CLOCK BIT ON TOO LONG ERROR, PC = XXXXX"
;       "FIRST CHARACTER TIME OUT ERROR, PC = XXXXX"
;       "DATA TRANSFER TIME OUT ERROR, PC = XXXXX"
;       "NO INTERRUPT ERROR, PC = XXXXX"
;       "ILLEGAL INTERRUPT WITH MASK BIT SET, MASK = XX,/
;       PC = XXXXX"
;       "MTU SELECT ERROR, DIB COMMAND = XXXXXX, PC = XXXXX"
;       "MA REGISTER NOT RESET BY IORST"
;       "GOOD WORD = XXXXXX, BAD WORD = XXXXXX, PC = XXXXX"
;       "MA REGISTER SETTING ERROR"
;       "GOOD WORD = XXXXXX, BAD WORD = XXXXXX, PC = XXXXX"
;       "INTA DEVICE CODE ERROR"
;       "DEVICE CODE = XX, UNIT DEVICE CODE = XX, PC = XXXXX"
;       10.2    SYSTEM ERRORS
;               THE FOLLOWING ERRORS OCCURE DURING COMBINED CON-
;               TROLLER AND DRIVE OPERATIONS.
;               10.2.1  DATA TRANSFER AND MA REGISTER ERRORS
;       "MA REGISTER COUNTING ERROR"
;       "GOOD VALUE = XXXXXX, BAD VALUE = XXXXXX, PC = XXXXX"
;       "DATA COMPARE ERROR"
;       "GOOD WORD = XXXXXX, BAD WORD = XXXXXX /
;       MEMORY ADDRESS = XXXXXX, PC = XXXXX"
;               10.2.2  STATUS ERRORS
;       "EXPECTED STATUS = XXXXXX, ACTUAL STATUS = XXXXXX, /
;       PC = XXXXX"
;       10.3    STATUS WORD
;               BIT     DESCRIPTION
;               0       ANY ERROR, SET BY BITS 1,3,5,6,7,8,10,14
;               1       DATA LATE
;               2       REWINDING
;               3       ILLEGAL COMMAND
;               4       HIGH DENSITY
;               5       PARITY ERROR
;               6       EOT MARK SENSED
;               7       EOF MARK SENSED
;               8       BOT MARK SENSED
;               9       9 TRACK TAPE
;               10      BAD TAPE
;               11      ID BURST (PE ONLY)
;                       ALWAYS 0 FOR MT133 (6125 EMULTION)
;               12      CORRECTED PARITY ERROR (PE ONLY)
;                       ALWAYS 0 FOR MT133 (6125 EMULATION)
;               13      WRITE LOCKOUT
```

```
;               14      CRC ERROR
;               15      UNIT READY
        ODTD    11
;12     SPECIAL NOTES
;       12.1    MEDIA SELECTION
;               IT IS IMPORTANT TO SELECT A KNOWN GOOD TAPE WHEN
;               PERFORMING THE DIAGNOSTIC.  ANY ERRORS CAUSED BY
;               THE MEDIA WILL BE CONSIDERED A CONTROLLER AND/OR
;               DRIVE FAULT.
;       12.2    SCOPE LOOPS
;               WHEN A SCOPE LOOP IS BEING IMPLEMENTED TO LOCATE
;               A FAILING MODULE AND FORWARD TAPE MOTION IS
;               USED, THE TAPE WILL COME OFF THE SUPPLY REEL IF
;               THE LOOP IS ALLOWED TO CONTINUE.  WHEN THE TAPE
;               APPROACHES THE EOT SENSOR, ENTER THE ODT PROGRAM
;               BY TYPING A CONTROL "O" CHARACTER, MANUALLY RE-
;               WIND THE DRIVE AND TYPE A "P" CHARACTER TO CON-
;               TINUE.
;13.    RUN TIME
;       THE PROGRAM RUN TIME DEPENDS ON THE LENGTH OF THE TAPE.
;       IT IS RECOMMENDED THAT A 600 FOOT REEL BE USED TO SPEED
;         UP THE WRITE TO EOT SENSOR TEST.
```

```
1 UMTR    AOS ASSEMBLER REV 04.20        12:54:18 03/27/84
          ;
          ;
          ;
          ;*****************************************************************
          ;
          ; DECRIPTION: UNIVERSAL MAGNETIC TAPE RELIABILITY
          ;
          ;
          ; PRODUCT OF ZETACO 1984
          ;*****************************************************************
                    .TITL   UMTR
000001              X=1
000001              .NOMAC  X
          ;1.       PROGRAM NAME:   UMTR.SR
          ;
          ;2.       REVISION HISTORY:
          ;
          ;                 REV.      DATE
          ;         .REV     00.0   ;06/07/82
          ;         .REV     01.0   ;08/83 BY P.A.N. FOR CSI
          ;                         TO HANDLE CSI MODEL 130A (6125 EMULATION)
          ;                         ASK FOR MODEL NUMBER.
          ;                         IF 130A BIT 0 OF DOB/DIB WONT'T BE MASKED.
          ;                         9/83 - FOR 130A ALLOW FOR BIGGER RECORD.
          ;                                (8K WORDS)
          ;         .REV    02.0    ;03/22/84
          ;                         120 TO 133 AND PROPER DEVICE CODE CHANGE
          ;                         ROUTINE
          ;
          ;3.       MACHINE REQUIREMENTS
          ;
          ;         3.1     NOVA OR ECLIPSE FAMILY CPU'S
          ;         3.2     MINIMUM OF 16K MEMORY
          ;         3.3     ZETACO MAG TAPE COUPLER (CONTROLLER) BOARD
          ;         3.4     TELETYPE OR CRT AND CONTROLLER
          ;         3.5     TAPE DRIVE (S)
          ;4.       TEST REQUIREMENTS
          ;
          ;         N/A
          ;
          ;5.       SUMMARY
          ;
          ;         THE TAPE RELIABILITY PROGRAM IS A MAINTENANCE
          ;         PROGRAM INTENDED TO VERIFY THE MAGNETIC TAPE
          ;         SUB-SYTEM OPERATION.
          ;
          ;6.       RESTRICTIONS
          ;
          ;         ONLY THOSE TAPE DRIVES TO BE TESTED ARE TO
          ;         BE ONLINE.  ALL ONLINE DRIVES MUST BE WRITE ENABLED.
```

```
;7.      PROGRAM DESCRIPTION/THEORY OF OPERATION
;
;        7.1     RANDOM RELIABILITY (SA 500)
;
;                THE RANDOM RELIABILITY TEST WRITES RANDOM
;                LENGTH FILES. EACH FILE CONSISTS OF FROM
;                1 TO 7 RANDOM LENGTH, RANDOM PATTERN REC-
;                ORDS. THE RANDOM FILES ARE WRITTEN AND
;                READ THE FULL LENGTH OF THE MEDIA. IF
;                MORE THAN ONE(1) TAPE DRIVE IS AVAILABLE,
;                A UNIQUE RANDOM FILE WILL BE WRITTEN ON EACH
;                UNIT SEQUENTIALILY. WHEN EACH UNIT'S EOT
;                SENSOR IS DETECTED, ITS ACCUMULATED
;                HISTORY IS PRINTED AND THE UNIT IS COM-
;                MANDED TO REWIND. ALL WRITE ENABLED,
;                READY TAPE UNITS WILL BE TESTED. A UNIT
;                CAN BE MADE READY AND WILL BE TESTED AFTER
;                THE TEST HAS BEEN INITIATED. IF A UNIT
;                BECOMES NOT READY DURING THE TEST, ITS
;                HISTORY WILL BE PRINTED AND THE UNIT
;                WILL BE REMOVED FROM THE AVAILABLE UNITS
;                LIST. THE TEST WILL CONTINUE UNTIL STOPPED
;                BY THE OPERATOR.
;
;        7.2     INTERCHANGE TEST, WRITE/READ (SA 501)
;
;                THE INTERCHANGE TEST IS USED TO VERIFY THE
;                INTERCHANGABLITY OF THE TAPE UNITS. THIS
;                TEST GENERATES 200, 2000 WORD RECORDS OF
;                SKEW PATTERNS FOLLOWED BY 200, 2000 WORD
;                RECORDS OF RANDOM DATA. AFTER ALL THE
;                ONLINE, WRITE ENABLED UNITS HAVE BEEN
;                WRITTEN, THEY ARE ALL READ TO INSURE
;                PROPER WRITTING. THE OPERATOR THEN INTER-
;                CHANGES THE TAPES AND PERFORMS ANOTHER
;                READ VERIFICATION. THIS PROCEDURE IS CON-
;                TINUED UNTIL EACH TAPE HAS BEEN READ BY
;                ALL THE UNITS. AFTER EACH READ, A SUMMARY
;                OF THE ACCUMULATED STATISTICS FOR EACH
;                UNIT IS PRINTED. AFTER ALL THE UNITS HAVE
;                BEEN READ, A TEST COMPLETE MESSAGE IS
;                PRINTED. IF THE OPERATOR WISHES TO CON-
;                TINUE THE TEST, TYPING A 'P' CHARACTER
;                WILL REPEAT THE ENTIRE TEST.
;
;        7.3     INTERCHANGE, READ ONLY (SA 502)
;
;                THE READ ONLY INTERCHANGE TEST PROVIDES
;                A MEANS OF TESTING TAPE UNITS WITH PRE-
;                RECORDED TAPES. THE TAPES MUST BE RECORDED
;                IN THE FORMAT DESCRIBIED BY SECTION 7.2.
;                THE READ OPERATION IS IDENTICAL TO
;                SECTION 7.2.
;        7.4     COMMAND STRING INTERPRETER (SA 504)
;
;                THE COMMAND STRING INTERPRETER PROVIDES
;                A TROUBLE SHOOTING AID TO ISOLATE A
;                FAULT. THE OPERATOR CAN SELECT ALL POS-
;                IBLE OPERATING MODES BY RESPONDING TO
;                CONSOLE REQUESTS. ALL NUMBERS MUST BE
```

ENTERED IN OCTAL.

7.4.1 UNIT

UNIT NUMBER AND/OR CARRIAGE RETURN TO USE PREVIOUS COMMAND STRING. IF ONLY A CARRIAGE RETURN IS TYPED, NO OTHER REQUESTS WILL BE MADE AND THE LAST ENTERED COMMAND STRING WILL BE RUN. THE ENTRY IS IN THE RANGE OF 0 TO 7. THE DEFAULT UNIT NUMBER IS 0.

7.4.2 WC (WORD COUNT)

TYPE AN OCTAL NUMBER TO SELECT THE DATA BLOCK SIZE AND/OR A CARRIAGE RETURN TO USE THE PREVIOUS ENTRY. THE DEFAULT VALUE IS THE MAXIMUM BLOCK SIZE. THE ENTRY IS IN THE RANGE OF 2 TO THE MAXIMUM BLOCK SIZE.

7.4.3 DATA

SELECT ONE OF THE FOLLOWING DATA PATTERNS AND/OR A CARRIAGE RETURN TO USE THE PREVIOUS ENTRY. THE DEFAULT PATTERN IS RANDOM.

RAND - RANDOM
ALL1 - ALL ONE'S
ALL0 - ALL ZERO'S
ALT0 - ALTERNATING ZERO/ONE (000377)
ALT1 - ALTERNATING ONE/ZERO (177400)
FLT0 - FLOATING ZERO
FLT1 - FLOATING ONE
SKEW - SKEW
VARIABLE - THE VARIABLE PATTERN IS ENTERED BY THE OPERATOR AS OCTAL CHARACTER STRINGS. UP TO 8, 16 BIT OCTAL NUMBERS CAN BE ENTERED. THE DATA BUFFER IS BUILT BY REPEATING THE ENTERED CHARACTER STRINGS.

7.4.4 PARITY

TYPE 'EVEN' OR 'ODD' AND/OR CARRIAGE RETURN TO SELECT THE PARITY OR USE THE PREVIOUS ENTRY. THE DEFAULT PARITY IS ODD.

7.4.5 COMMAND STRING

THE OPERATOR CAN SELECT THE SUBSYSTEM OPERATION BY TYPING THE DESIRED COMMANDS AND/OR CARRIAGE RETURN. ALL N(NUMBER) ENTRIES MUST

BE IN OCTAL. IF THE COMMAND STRING
EXCEEDS THE LINE LENGTH, TYPE A
LINEFEED TO CONTINUE ON THE NEXT
LINE. THE FOLLOWING IS A LIST OF
AVAILABLE SUB-SYSTEM COMMANDS.

```
RD N     READ N RECORDS
RW       REWIND
SB N     SPACE BACK N RECORDS
SF N     SPACE FORWARD N RECORDS
WT N     WRITE N RECORDS
WE       WRITE END OF FILE MARK
ER       ERASE 3" OF TAPE
RE       READ END OF FILE MARK
LOOP     LOOP BACK TO FIRST COMMAND
*        LOOP TO HERE
LOOP *   LOOP TO *
```

SAMPLE COMMAND STRINGS

```
RW WT 10 SB 10 RD 10 LOOP
```

THE ABOVE COMMAND STRING WILL REWIND,
WRITE 8 RECORDS, SPACE BACK 8 RECORDS,
AND READ 8 RECORDS. THIS TEST WILL
CONTINUE UNTIL STOPPED BY THE OPERATOR.

```
RW,WT 10,WE * RW,SF,10,SB,10,RD,10,RE,
LOOP *
```

THE ABOVE COMMAND STRING WILL REWIND,
WRITE 8 RECORDS, WRITE AN EOF MARK,
AND THEN LOOP ON REWIND, SPACE FORWARD
8 RECORDS, SPACE BACK 8 RECORDS, READ
8 RECORDS AND READ EOF MARK.

NOTE: EITHER A SPACE OR COMMA CAN BE
USED AS AN ARGUEMENT DELIMITER.
IF AN INCORRECT CHARACTER OR
CHARACTERS ARE TYPED, TYPE A RUB-
OUT CHARACTER TO DELETE THE PRE-
VIOUSLY TYPED CHARACTER. THE DELE-
TED CHARACTER WILL BE PRINTED.

WHILE THE COMMAND STRING IS BEING EXECUTED,
TYPE A 'R' CHARACTER TO CAUSE THE PROGRAM
TO RETURN TO THE UNIT PROMPT. THE ESCAPE
KEY WILL CAUSE THE PROGRAM TO RETURN TO THE
COMMAND STRING ENTRY POINT.

7.5 HISTORY RECOVERY (SA 504)

IF THE PROGRAM HAS STOPPED DURING AN OPERATION,
THE ACCUMULATED ERROR AND PASS HISTORY CAN BE
RECOVERED BY THIS PROGRAM. THIS PROGRAM MUST
BE RUN BEFORE ANY OTHER PROGRAM IS RESTARTED.

TO RETRIEVE THE ACCUMULATED ERROR AND PASS
HISTORY WHILE THE RELIABILITY TEST IS RUNNING,
TYPE A SPACE. THIS WILL CAUSE THE ACCUM-
ULATED HISTORIES OF ALL TESTED UNITS TO BE

```
;               PRINTED.
;8.  OPERATING MODES/SWITCH SETTINGS.
;               SWITCH OPTIONS
;               BIT     OCTAL   BINARY  INTERPRETATION
;                       VALUE   VALUE
;
;               2       20000   0       ENABLE PRINT ON CONSOLE
;                               1       INHIBIT PRINT ON CONSOLE
;
;               5       02000   0       INHIBIT LINEPRINTER
;                               1       ENABLE LINEPRINTER
;
;               7       00400   0       ENABLE PRINT PARITY ERRORS
;                               1       INHIBIT PRINT PARITY ERRORS
        S?WPD   8
;               "ESC"   THIS COMMAND GIVEN WHILE RUNNING THE
;                       ENTERED COMMAND STRING WILL CAUSE THE
;                       PROGRAM TO RESTART AT THE COMMAND STRING
;                       ENTER PROMPT.
;
;9.      OPERATING PROCEDURES/OPERATOR INPUT
;
;       9.1     PROGRAM LOAD
;
;               LOAD THE PROGRAM BY USING THE BINARY LOADER.
;
;       9.2     STARTING ADDRESSES
;
;               SA      PROGRAM FUNCTION
;
;               500     START RELIABILITY TEST
;               501     START INTERCHANGE TEST, WRITE/READ
;               502     START INTERCHANGE TEST, READ ONLY
;               503     START COMMAND STRING INTERPRETER
;               504     DIRECT ENTRY FOR ERROR LOG RECOVERY
;
;       9.3     PROGRAM OPERATION
;
;               9.3.1   INITIALIZATION
;
;                       THE FOLLOWING MESSAGE IS PRINTED REQUESTING
;                       THE SETTING OF THE SOFT SWITCH REGISTER.
;
;       "SET SWITCH REGISTER TO DESIRED VALUE, THEN PRESS RETURN TO CONTINUE"
;       M
;       0  1  2  3  4  5  6  7  8  9  10 11 12 13 14 15
;       1  1  0  0  0  0  0  0  0  0  0  0  0  0  0  0
;
;       0
;
;                       MODIFY THE SWITCH REGISTER SETTING AS
;                       DESCRIBED IN SECTION 8.3, FOLLOWED BY
;                       A CARRIAGE RETURN.  THE FOLLOWING MESSAGES
;                       WILL BE PRINTED.
;
;                       IF  A REAL TIME CLOCK IS NOT PRESENT IN
;                       THE SYSTEM, THE FOLLOWING MESSAGE WILL
;                       BE PRINTED.
;
;       "TTO BAUD RATE = ?..."
```

```
;
;                       RESPOND TO THE REQUEST BY TYPING THE
;                       CORRECT CONSOLE DEVICE BAUD RATE FOR
;                       I/O TIMING CALIBRATION.  IF THE RESPONSE
;                       IS 110, THE FOLLOWING REQUEST MESSAGE
;                       WILL BE PRINTED.
;       "10 OR 11 BITS/CHAR = ?"
;
;                       RESPOND TO THE REQUEST BY TYPING 10 OR
;                       11.
;
;
;       "RELIABILITY TEST"
;       "SPECIFY THE MODEL NUMBER OF THE ZETACO COUPLER(S) BEING TESTED."
;       "(110=1, 120=2, 133 (6021)=3, 133 (6125)=4):"
;
;                       YOU SHOULD RESPOND TO THIS QUESTION BY
;                       ENTERING THE NUMBER ASSOCIATED WITH THE
;                       ZETACO MODEL NUMBER FOR THE COUPLER IN THE
;                       TAPE UNIT(S) BEING TESTED.  FOR EXAMPLE,
;                       IF YOU ARE RUNNING WITH ZETACO COUPLER 133
;                       (6021) ENTER "3".
;
;
;
;       "ENTER DEVICE CODE [22  ]:"
;
;                       ANSWER THE REQUEST BY TYPING OCTAL DEVICE CODE.
;                       IF ANY DEVICE CODE OTHER THEN 20 THRU 76 IS
;                       SELECTED, THE DEVICE CODE ENTRY PROMPT
;                       WILL BE PRINTED AGAIN.
;
;       "ENTER 0 TO TEST CRC (NRZI ONLY).  OTHERWISE, ENTER 1."
;
;       ANSWER 0 IF TAPE DRIVE IS 800 BPI NRZI OTHERWISE
;       ENTER 1. NEXT A REQUEST IS MADE TO DETERMINE THE ERROR RECOVERY
;       SEQUENCE THAT IS TO BE USED. THIS IS DETERMINED BY THE TYPE OF OPERATING
;       SYSTEM THE CONTROLLER WILL BE USED IN. THE REQUEST IS MADE AS FOLLOWS:
;
;     "ENTER 1 IF CONTROLLER WILL BE RUN IN AN AOS SYSTEM.  OTHERWISE, ENTER 0."
;
;               9.3.2   PROGRAM ENTRY
;
;                       WHEN ENTERING THE RELIABILITY PROGRAM,
;                       THE FOLLOWING MESSAGE WILL BE PRINTED
;
;       "MOUNT SCRATCH TAPE(S).  PRESS RETURN TO CONTINUE."
;
;                       THE OPERATOR SHOULD MAKE READY ALL TAPE
;                       UNITS TO BE TESTED.  ANY TAPE UNIT THAT
;                       IS ONLINE WILL BE TESTED.  AFTER ALL
;                       UNITS ARE READY, ENTER CR. ON THE CON-
;                       SOLE TO CONTINUE.
;
;               9.3.3   INTERCHANGE TEST, WRITE/READ
;
;                       ENTRY TO THE INTERCHANGE TEST IS IDENT-
;                       ICAL TO THE RELIABILITY TEST WITH THE
;                       FOLLOWING EXCEPTION.
;
```

"INTERCHANGE TEST(WRITE/READ)"

AFTER THE INITIALIZATION SECTION, THE FOLLOWING MESSAGE IS PRINTED.

"MOUNT SCRATCH TAPE(S). PRESS RETURN TO CONTINUE."

MAKE READY ALL TAPE UNITS TO BE TESTED AND ENTER CR. TO CONTINUE.

9.3.4 INTERCHANGE TEST, READ ONLY

ENTRY TO THE INTERCHANGE TEST IS IDENTICAL TO THE RELIABILITY TEST WITH THE FOLLOWING EXCEPTION.

"INTERCHANGE TEST(READ ONLY)"

AFTER THE INTIALIZATION SECTION THE FOLLOWING MESSAGE IS PRINTED.

"MOUNT PRE-RECORDED TAPE(S), ENTER CR. TO CONTINUE."

MOUNT PRE-RECORDED TAPES ON ALL TAPE UNITS TO BE TESTED AND ENTER CR.

9.4 COMMAND STRING INTERPRETER

9.4.1 INITIALIZATION

ALL ERROR AND PASS COUNTERS ARE CLEARED AND THE FOLLOWING REQUEST MESSAGE IS PRINTED.

"SET SWITCH REGISTER TO DESIRED VALUE, THEN PRESS RETURN TO CONTINUE."

NOTE. THE "X" VALUE INDICATE THE UNKNOWN STATE OF THE COMMAND BITS.

RESPOND TO THE REQUEST BY SETTING THE "SWREG" LOCATION AS DESCRIBED BY SECTION 3.3, FOLLOWED BY A CARRIAGE RETURN.

THE MEMORY IS SIZED NEXT AND THE TIME BASE IS CALIBRATED. IF A REAL TIME CLOCK IS NOT PRESENT IN THE SYSTEM, THE FOLLOWING REQUEST IS PRINTED.

"TTO BAUD RATE = ?"

RESPOND TO THE REQUEST BY TYPING THE CORRECT CONSOLE DEVICE BAUD RATE. IF THE RESPONSE IS 110, THE FOLLOWING REQUEST MESSAGE WILL BE PRINTED.

"# BITS/CHAR = ?"

RESPOND TO THE REQUEST BY TYPING 10 OR 11

9.4.2 PROGRAM ENTRY

THE FOLLOWING MESSAGES ARE PRINTED

```
;                       INDICATING THE ENTRY TO THE COMMAND
;                       STRING INTERPRETER.
;
;       "COMMAND STRING INTERPRETER"
;       "MAXIMUM WORD COUNT = XXXX"
;
;                       NOTE:   THE MAXIMUM WORD COUNT VALUE
;                               INDICATES THE LARGEST DATA
;                               BUFFER AVAILABLE.
;
;                       THE SUB-SYSTEM DEFAULT VALUES ARE SET
;                       AS FOLLOWS:
;
;                       UNIT    0
;                       WC      SET TO MAXIMUM WORD COUNT
;                       DATA    RANDOM PATTERN
;                       PARITY  ODD
;
;                       WHEN THE "UNIT" PROMPT IS TYPED, REFER
;                       TO SECTION 7.4, FOR PROGRAM OPERATION.
;10.    PROGRAM OUTPUT/ERROR DESCRIPTION
;
;       ALL ERRORS ARE IDENTIFIED, COUNTED AND PRINTED ON
;       THE BASIS OF THE SETTING OF LOCATION "SWREG".
;
;       IF A UNIT GOES NOT READY, AN APPROPRIATE ERROR
;       MESSAGE AND ITS ACCUMULATED STATISTICAL HISTORY
;       IS PRINTED.  IF ONLY ONE(1) UNIT IS BEING TESTED,
;       AN APPROPRIATE MEESAGE WILL BE PRINTED AND THE
;       PROGRAM WILL WAIT FOR OPERATOR INTERVENTION.  IF
;       MORE THAN ONE UNIT IS AVAILABLE, THE TEST PROCESS
;       WILL CONTINUE.
;
;       ALL ERRORS ARE SOFT UNLESS SPECIFIED AS HARD OR
;       FATAL.
;
;       10.1    STATISTICAL HISTORY PRINTOUT
;
;               THE STATISTICAL HISTORY IS PRINTED FOR
;               EACH UNIT WHEN IT REACHES ITS EOT SENSOR.
;               THE STATISTICAL HISTORY FOR ALL TESTED
;               UNITS CAN BE REQUESTED BY TYPING A
;               "SPACE" CHARACTER.  A SAMPLE OF THE
;               PRINTOUT IS AS FOLLOWS:
;
;       "UNIT    0       1"
;       "PAR WR  1       0"
;       "PAR RD  1       1"
;       "PERM WR 1       0"
;       "PERM RD 0       0"
;       "WDS RD  30348   1075827"
;       "WDS WR  31345   1075827"
;       10.2    STATUS WORD
;
;               BIT     DESCRIPTION
;
;               0       ANY ERROR, SET BY BITS 1,3,5,6,7,8,10,14
;
;               1(E)    DATA LATE
;               2       REWINDING
```

```
;               3(E)    ILLEGAL COMMAND
;
;               4       HIGH DENSITY
;               5(E)    PARITY ERROR
;               6(E)    EOT MARK SENSED
;
;               7(E)    EOF MARK SENSED
;               8(E)    BOT MARK SENSED
;               9       9 TRACK TAPE
;
;               10(E)   BAD TAPE
;               11      SEND CLOCK OR ID STATUS
;               12      FIRST CHARACTER OR CORRECTED ERROR
;
;               13      WRITE LOCKOUT
;               14(E)   CRC ERROR OR ODD REC READ
;               15      UNIT READY
        .DSTD 11
.12.    SPECIAL NOTES
;
;       12.1    MEDIA SELECTION
;
;               IT IS IMPORTANT TO SELECT KNOWN GOOD TAPES
;               WHEN PERFORMING THE RELIABILITY TESTS. USING
;               MARGINAL TAPE MEDIA WILL CAUSE SOFT AND HARD
;               ERRORS TO OCCURE. TO VERIFIY THE SUB-SYSTEM
;               RELIABILITY THE TAPE MEDIA SHOULD NOT INFLUENCE
;               THE PASS OR FAIL CRITERIA.
;
;       12.2    DATA ENTRY
;
;               ALL NUMBER ENTRIES MUST BE IN OCTAL. ANY OTHER
;               ENTRY WILL BE CONSIDERED AS AN ALPHA CHARACTER.
;
.13.    RUN TIME
;
        THE PROGRAM RUN TIME IS DEPENDENT ON THE LENGTH OF THE
        TAPE MEDIA.
        .EOT
```

```
;
;
;
;*****************************************************************************
;
; DESCRIPTION:  STREAMER MAG TAPE CONFIGURATOR (PRE-DEFINED)
;
;
; PRODUCT OF ZETACO, 1984
;*****************************************************************************;
;1.     PROGRAM NAME. LNG.SR
;
;2.     REVISION HISTORY.
;
;       REV.        DATE
;        00      11/13/81
;REV     01.0   ;03/27/84        ;ZETACO
;3.     REQUIREMENTS.
;       SYSTEM EXECUTATABLE
;4.     SUMMARY
;       THIS PROGRAM IS PROVIDED TO CONFIGURE A STREAMER MAG TAPE, FOR        -
;       HIGH SPEED AND DYNAMIC GAP.
;
;       CONFIGURATION BITS OF DOA WITH BIT 5 = 1:
;                10     MINIMUM GAP*
;                9      DYNAMIC GAP
;                8      HIGH SPEED
;               6-7     LIMITS
;                5      STREAMER MODE SELECT
;                -
;       LIMITS
;       6   7   10      MAX             MIN
;       0   0   0        75MS           NOMINAL
;       0   1   0       150MS           NOMINAL
;       1   0   0       300MS           NOMINAL
;       1   1   0         4SEC          NOMINAL
;       0   0   0        75MS           30MS
;       0   1   1       150MS           60MS
;       1   0   1       300MS           90MS
;       1   1   1         4SEC         120MS

;       *NOTE: MIMIMUM GAP IS ONLY TRUE IF DRIVE IS STREAMING, IF
;               REPOSITIONING OCCURS GAP IS OF NOMINAL LENGTH(NOMINAL IS .6 IN)
        .TITL   LNG
        .NREL
00000'020426 LOAD:  LDA     0,C22                   ;PRIMARY TAPE
                    ?DEBL                           ;ENABLE         ;.SYSTM (RDOS)
00003'000401        JMP     .+1                     ;NO ERROR       ;.DEBL
00004'020424        LDA     0,CWORD                 ;CONFIGURATION WORD
00005'061022        DOA     0,22                    ;CONFIGURE PRIMARY MT
00006'020420        LDA     0,C22
                    ?DDIS                                           ;.SYSTM (RDOS)
00011'000401        JMP     .+1                                     ;.DDIS
00012'020415        LDA     0,C62
                    ?DEBL                                           ;.SYSTM (RDOS)
00015'000401        JMP     .+1                                     ;.DEBL
00016'020412        LDA     0,CWORD
00017'061062        DOA     0,62                    ;CONFIGURE SECONDARY
00020'020407        LDA     0,C62
                    ?DDIS                                           ;.SYSTM (RDOS)
```

```
 LNG
023'000401          JMP     .+1                         ;.DOIS
                    ;RETURN                             ;.SYSTM (RDOS)
                                                        ;.RTN
026'000022 C22:     22
027'000062 C62:     62
030'002000 CWORD:   2000                .NOMINAL GAP, LOW SPEED, AND STREAMER SELECT MODE.
                    .END    LOAD
00 TOTAL ERRORS, 00000 FIRST PASS ERRORS
```

000S LNG

?	000026'		1/46	1/51	2/03#		
?	000027'		1/54	1/59	2/04#		
JRD	000030'		1/49	1/57	2/05#		
ID	000000'		1/46#	2/06			
)IS	001711	MC	1/52	1/60			
EBL	001671	MC	1/47	1/55			
FTU	006401	MC	2/02				
CAL	000001		1/48	1/53	1/56	2/01	2/0C

```
LDG75   AOS ASSEMBLER REV 04.20         10:04:33 03/28/84
        ;
        ;
        ;
        ;*************************************************************************
        ;
        ; DESCRIPTION:  STREAMER MAG TAPE CONFIGURATOR (PRE-DEFINED)
        ;
        ;
        ; PRODUCT OF ZETACO, 1984
        ;*************************************************************************;
        ;1.     PROGRAM NAME: LDG75.SR
        ;
        ;2.     REVISION HISTORY:
        ;
        ;       REV.       DATE
        ;        00     11/13/81
        ;REV     01.0   ;03/27/84        ZETACO
        ;3.     REQUIREMENTS:
        ;       SYSTEM EXECUTATABLE
        ;4.     SUMMARY:
        ;       THIS PROGRAM IS PROVIDED TO CONFIGURE A STREAMER MAG TAPE, FOR
        ;       HIGH SPEED AND DYNAMIC GAP.
        ;
        ;       CONFIGURATION BITS OF DOA WITH BIT 5 = 1:
        ;                10     MINIMUM GAP*
        ;                9      DYNAMIC GAP
        ;                8      HIGH SPEED
        ;               6-7     LIMITS
        ;                5      STREAMER MODE SELECT
        ;                -
        ;       LIMITS:
        ;       6   7   10      MAX             MIN
        ;       0   0   0        75MS           NOMINAL
        ;       0   1   0       150MS           NOMINAL
        ;       1   0   0       300MS           NOMINAL
        ;       1   1   0         4SEC          NOMINAL
        ;       0   0   0        75MS           30MS
        ;       0   1   1       150MS           60MS
        ;       1   0   1       300MS           90MS
        ;       1   1   1         4SEC         120MS
        ;
        ;       *NOTE. MINIMUM GAP IS ONLY TRUE IF DRIVE IS STREAMING, IF
        ;              REPOSITIONING OCCURS GAP IS OF NOMINAL LENGTH(NOMINAL IS .6 IN)
                .TITL   LDG75
                .NREL
000000/020426 LOAD:   LDA     0,C22                   ;PRIMARY TAPE
                      ?DEBL                           ;ENABLE         ;.SYSTM (RDOS)
000003/000401         JMP     .+1                     ;NO ERROR       ;.DEBL
000004/020424         LDA     0,CWORD                 ;CONFIGURATION WORD
000005/061022         DOA     0,22                    ;CONFIGURE PRIMARY MT
000006/020420         LDA     0,C22
                      ?DDIS                                   ;.SYSTM (RDOS)
000011/000401         JMP     .+1                             ;.DDIS
000012/020415         LDA     0,C62
                      ?DEBL                                   ;.SYSTM (RDOS)
000015/000401         JMP     .+1                             ;.DEBL
000016/020412         LDA     0,CWORD
000017/061062         DOA     0,62                    ;CONFIGURE SECONDARY
000020/020407         LDA     0,C62
                      ?DDIS                                   ;.SYSTM (RDOS)
```

```
 LDG75
023'000401          JMP     .+1
                    ;RETURN
026'000022 C22:     22
027'000062 C62:     62
030'002100 CWORD:   2100

                    .END    LOAD
00 TOTAL ERRORS, 00000 FIRST PASS ERRORS
```

```
                                    ;.DOS
                                    ;.SYSTM (RDOS)
                                    ;.RTN

;75MS MAX GAP, MIN NOMINAL GAP, LOW SPEED,
;AND STREAMER SELECT MODE.
```

0003 LOG75

2	000026'		1/46	1/51	2/03#		
2	000027'		1/54	1/59	2/04#		
GRD	000030'		1/49	1/57	2/05#		
MD	000000'		1/46#	2/07			
DIS	001711	MC	1/52	1/60			
EBL	001671	MC	1/47	1/55			
ETU	006401	MC	2/02				
CAL	000001		1/48	1/53	1/56	2/01	2/03

```
L  HNG     AOS ASSEMBLER REV 04.20        10:05:31 03/28/84
           ;
           ;
           ;
           ;*****************************************************************************
           ;
           ; DESCRIPTION:  STREAMER MAG TAPE CONFIGURATOR (PRE-DEFINED)
           ;
           ;
           ; PRODUCT OF ZETACO, 1984
           ;*****************************************************************************;
           ;1.     PROGRAM NAME: HNG.SR
           ;
           ;2.     REVISION HISTORY:
           ;
           ;      REV.       DATE
           ;       00     11/13/81
           ;REV    01.0   03/27/84        ZETACO
           ;3.     REQUIREMENTS:
           ;      SYSTEM EXECUTATABLE
           ;4.     SUMMARY:
           ;      THIS PROGRAM IS PROVIDED TO CONFIGURE A STREAMER MAG TAPE, FOR
           ;      HIGH SPEED AND DYNAMIC GAP.
           ;
           ;      CONFIGURATION BITS OF DOA WITH BIT 5 = 1:
           ;               10    MINIMUM GAP*
           ;               9     DYNAMIC GAP
           ;               8     HIGH SPEED
           ;              6-7    LIMITS
           ;               5     STREAMER MODE SELECT
           ;               -
           ;      LIMITS:
           ;      6   7   10     MAX            MIN
           ;      0   0   0       75MS          NOMINAL
           ;      0   1   0      150MS          NOMINAL
           ;      1   0   0      300MS          NOMINAL
           ;      1   1   0        4SEC         NOMINAL
           ;      0   0   0       75MS          30MS
           ;      0   1   1      150MS          60MS
           ;      1   0   1      300MS          90MS
           ;      1   1   1        4SEC        120MS
           ;
           ;      *NOTE: MINIMUM GAP IS ONLY TRUE IF DRIVE IS STREAMING, IF
           ;             REPOSITIONING OCCURS GAP IS OF NOMINAL LENGTH(NOMINAL IS .6 IN)
                  .TITL   HNG
                  .NREL
00000 020426 LOAD: LDA     0,C22                ;PRIMARY TAPE
                  ?DEBL                         ;ENABLE          ;.SYSTM (RDOS)
00003 000401       JMP     .+1                  ;NO ERROR        ;.DEBL
00004 020424       LDA     0,CWORD              ;CONFIGURATION WORD
00005 061022       DOA     0,22                 ;CONFIGURE PRIMARY MT
00006 020420       LDA     0,C22
                  ?DDIS                                          ;.SYSTM (RDOS)
00011 000401       JMP     .+1                                    ;.DDIS
00012 020415       LDA     0,C62
                  ?DEBL                                          ;.SYSTM (RDOS)
00015 000401       JMP     .+1                                    ;.DEBL
00016 020412       LDA     0,CWORD
00017 061062       DOA     0,62                 ;CONFIGURE SECONDARY
00020 020407       LDA     0,C62
                  ?DDIS                                          ;.SYSTM (RDOS)
```

```
 HNG
023'000401          JMP     +1                          ;.DDIS
                    ;RETURN                             ;.SYSTM (RDOS)
                                                        ;.RTN
026'000022 C22:     22
027'000062 C62:     62
030'002200 CWORD:   2200                    ;NOMINAL GAP, HIGH SPEED, AND STREAMER SELECT MODE
                    .END    LOAD
00 TOTAL ERRORS, 00000 FIRST PASS ERRORS
```

0003 HNG

2	000026'		1/46	1/51	2/03#		
2	000027'		1/54	1/59	2/04#		
DRD	000038'		1/49	1/57	2/05#		
AD	000000'		1/46#	2/06			
DIS	001711	MC	1/52	1/60			
EBL	001671	MC	1/47	1/55			
ETU	006401	MC	2/02				
CHL	000001		1/48	1/53	1/56	2/01	2/03

```
L  HDG75    AOS ASSEMBLER REV 04.20        10:05:00 03/28/84
            ;
            ;
            ;
            ;*********************************************************************
            ;
            ; DESCRIPTION:  STREAMER MAG TAPE CONFIGURATOR (PRE-DEFINED)
            ;
            ;
            ; PRODUCT OF ZETACO, 1984
            ;*********************************************************************;
            ;1.      PROGRAM NAME: HDG75.SR
            ;
            ;2.      REVISION HISTORY:
            ;
            ;       REV.       DATE
            ;        00     11/13/81
           .REV     01.0   ;03/27/84        ZETACO
            ;3.     REQUIREMENTS:
            ;       SYSTEM EXECUTATABLE
            ;4.     SUMMARY:
            ;       THIS PROGRAM IS PROVIDED TO CONFIGURE A STREAMER MAG TAPE, FOR
            ;       HIGH SPEED AND DYNAMIC GAP.
            ;
            ;       CONFIGURATION BITS OF DOA WITH BIT 5 = 1:
            ;                10     MINIMUM GAP*
            ;                9      DYNAMIC GAP
            ;                8      HIGH SPEED
            ;               6-7     LIMITS
            ;                5      STREAMER MODE SELECT
            ;                -
            ;       LIMITS:
            ;       6   7   10      MAX             MIN
            ;       0   0   0        75MS           NOMINAL
            ;       0   1   0       150MS           NOMINAL
            ;       1   0   0       300MS           NOMINAL
            ;       1   1   0         4SEC          NOMINAL
            ;       0   0   0        75MS           30MS
            ;       0   1   1       150MS           60MS
            ;       1   0   1       300MS           90MS
            ;       1   1   1         4SEC         120MS
            ;
            ;       *NOTE: MINIMUM GAP IS ONLY TRUE IF DRIVE IS STREAMING, IF
            ;              REPOSITIONING OCCURS GAP IS OF NOMINAL LENGTH(NOMINAL IS .6 IN)
                    .TITL   HDG75
                    .NREL
00000'020426 LOAD:  LDA     0,C22               ;PRIMARY TAPE
                    ?DEBL                       ;ENABLE         ;.SYSTEM (RDOS)
00003'000401        JMP     .+1                 ;NO ERROR       ;.DEBL
00004'020424        LDA     0,CWORD             ;CONFIGURATION WORD
00005'061022        DOA     0,22                ;CONFIGURE PRIMARY MT
00006'020420        LDA     0,C22
                    ?DDIS                                       ;.SYSTM (RDOS)
00011'000401        JMP     .+1                                 ;.DDIS
00012'020415        LDA     0,C62
                    ?DEBL                                       ;.SYSTM (RDOS)
00015'000401        JMP     .+1                                 ;.DEBL
00016'020412        LDA     0,CWORD
00017'061062        DOA     0,62                ;CONFIGURE SECONDARY
00020'020407        LDA     0,C62
                    ?DDIS                                       ;.SYSTM (RDOS)
```

```
  HDG75
023'000401          JMP     .+1                         ;.DDIS
                    ;RETURN                             ;.SYSTM (RDOS)
                                                        ;.RTN
026'000022 C22:     22
027'000062 C62:     62
030'002300 CWORD:   2300            ;75MS MAX GAP, MIN NOMINAL GAP, HIGH SPEED,
                                    ;AND STREAMER SELECT MODE

                    .END    LOAD
00 TOTAL ERRORS, 00000 FIRST PASS ERRORS
```

0003 HDG75

2	000026′		1/46	1/51	2/03#		
2	000027′		1/54	1/59	2/04#		
ORD	000030′		1/49	1/57	2/05#		
HD	000000′		1/46#	2/07			
DIS	001711	MC	1/52	1/60			
EBL	001671	MC	1/47	1/55			
ETU	006401	MC	2/02				
CAL	000001		1/48	1/53	1/56	2/01	2/03

```
TAPEM   AOS ASSEMBLER REV 04.20        11:48:51 03/28/84
        ;
        ;
        ;
        ;
        ;
        ;*****************************************************************************
        ;
        ;
        ; DESCRIPTION:  STAND-ALONE STREAMER MAG TAPE CONFIGURATOR(CONSOLE PARAMETERS)
        ;
        ;
        ; PRODUCT OF ZETACO, 1981
        ;*****************************************************************************
                .TITL   TAPEM
000001          .DUSR   X=1
000000          .TXTM   0
        ;1.     PROGRAM NAME TAPEMODE.SR
        ;
        ;2. REVISION HISTORY
        ;
        ;       REV.              DATE
        ;        00             12/10/81
        ;        01             03/27/84        130 TO 133 AND PROPER DEVICE
        ;                                       CODE ROUTINE
        ;
        ;3.     MACHINE REQUIREMENTS:
        ;3.1     NOVA/ECLIPSE FAMILY PROCESSOR
        ;3.2     8K READ/WRITE MEMORY
        ;3.3     CONSOLE DEVICE
        ;3.4     ZETA 133 (6021 OR 6125) MAG TAPE COUPLER BOARD,
        ;        WITH A FORMATTED STREAMER TAPE DRIVE.

        ;4.     SUMMARY
        ;       THIS PROGRAM IS INTENDED FOR USE WITH THE MT133 COUPLER TO SET
        ;       CONFIGURATION AS DESIRED WHEN PROGRAM ASKS.
        ;       CONFIGURATION BITS OF DOA WITH BIT 5 = 1:
        ;                10     MINIMUM GAP*
        ;                9      DYNAMIC GAP
        ;                8      HIGH SPEED
        ;               6-7     LIMITS
        ;                5      STREAMER MODE SELECT
        ;                -
        ;       LIMITS:
        ;       6   7   10      MAX             MIN
        ;       0   0   0        75MS           NOMINAL
        ;       0   1   0       150MS           NOMINAL
        ;       1   0   0       300MS           NOMINAL
        ;       1   1   0         4SEC          NOMINAL
        ;       0   0   0        75MS           30MS
        ;       0   1   1       150MS           60MS
        ;       1   0   1       300MS           90MS
        ;       1   1   1         4SEC         120MS
        ;
        ;       *NOTE: MIMIMUM GAP IS ONLY TRUE IF DRIVE IS STREAMING, IF
        ;              REPOSITIONING OCCURS GAP IS OF NOMINAL LENGTH(NOMINAL IS .6 IN)
```