REVISIONS				
REV	DESCRIPTION	DR/TG	APP BY	DATE
00	RLSD PER ECO 2558			
01	REDRAW PER C556			
02	ECO 9932			
03	PER ECO 10464			
04	PER ECO 9933			

I/O SLOT 16

I/O SLOTS 12-15

MEM/IO SLOTS 4-11

MEM/IO/OPTION SLOT 3

FPU/MEM SLOT 2

CPU SLOT 1

POWER SUPPLY

TEST

"A" SIDE

J34

J35

"B" SIDE

J17

NOTES:

1. ⊠ SIGNAL IS DAISY CHAINED TO SLOT BELOW.
2. ☐ NOT CONNECTED.
3. PRIORITY SIGNALS $\overline{DCHPOUT}$ & $\overline{DCHPIN}$ ARE CONNECTED ON SLOTS 3 THRU 16 SO THAT PIN A93 IS CONN. TO PIN A94 ON THE SLOT ABOVE.
4. PRIORITY SIGNALS $\overline{INTPOUT}$ & $\overline{INTPIN}$ ARE CONN. ON SLOTS 2 THRU 16 SO THAT PIN A95 IS CONN. TO PIN A96 ON THE SLOT ABOVE.
5. * +5VOLT POWER DISTRIBUTION SHOWN ON SHEET 2.

016000675

ARTWORK: 107-973

ARTWORK VS SCHEMATIC

REV	SCHEMATIC REV(S)
01	01.02.03

UNLESS OTHERWISE SPECIFIED USE 8 1C SPECIFICATION 100 FOR TOLER ANCES AND MATERIAL SHIP REQUIREMENTS

DATA GENERAL CORPORATION
SOUTHBORO MASSACHUSETTS 01772

TITLE
DGC MACHINE BACKPANEL

SHEET 1 OF 3

SIZE D | 005-000563 | REV C4

REVISIONS				
REV	DESCRIPTION	DRFTG	APP BY	DATE

RESISTOR FENCE
(+5VA COMMON)
Ø5Ø11987
180Ω RESISTORS
ØØ45
R1

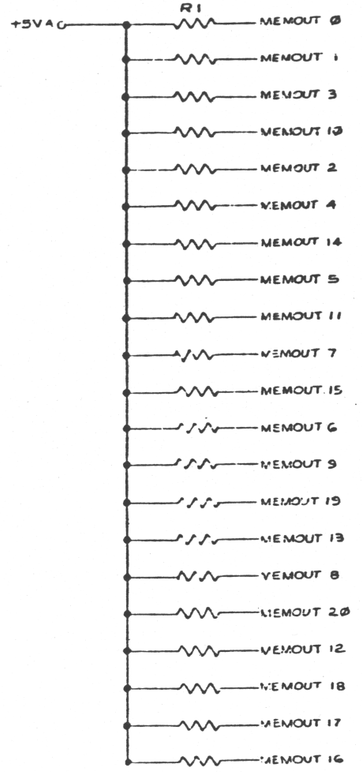

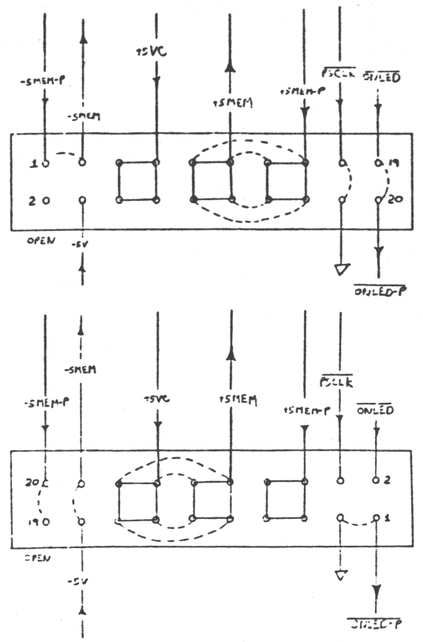

TEST PLUG
NORMAL POSITION

TEST PLUG
TEST POSITION

REED SWITCHES

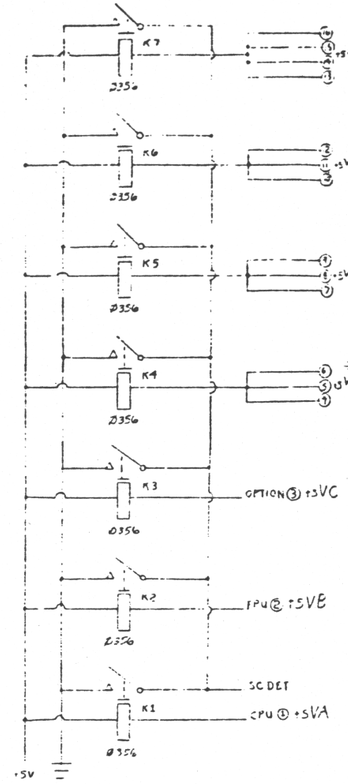

NOTES:

1. ! DENOTES JUMPER ON PLUG
2. TEST PLUG IS ROTATED 180° TO CONVERT FROM "NORMAL" TO "TEST."
3. ③ DENOTES SLOT ③
4. ASSEMBLY NO. FOR RELAYS IS ØØ4-ØØ528
5. REED SWITCH CURRENT TRIP AT 22 AMP.

ITEM	QTY	DESCRIPTION	PART NO.

DO NOT SCALE DRAWING
UNLESS OTHERWISE SPECIFIED USE DGC SPECIFICATION 100 00002 FOR TOLERANCES AND WORKMANSHIP REQUIREMENTS

MATERIAL

FINISH

DRAWN	CORSI	7/6/78
CHECKED		
ENGINEER		
APPROVED		
FIRST USED ON		

DATA GENERAL CORPORATION
SOUTHBORO, MASS. 01772

TITLE

DGC
BACKPANEL

SCALE	CODE IDENT	SIZE	CODE	DRAWING NUMBER	REV
	34984	D	001	Ø01563	C4

SHEET 2 OF 3

SYSTEM CONFIGURATION OF TERMINATORS

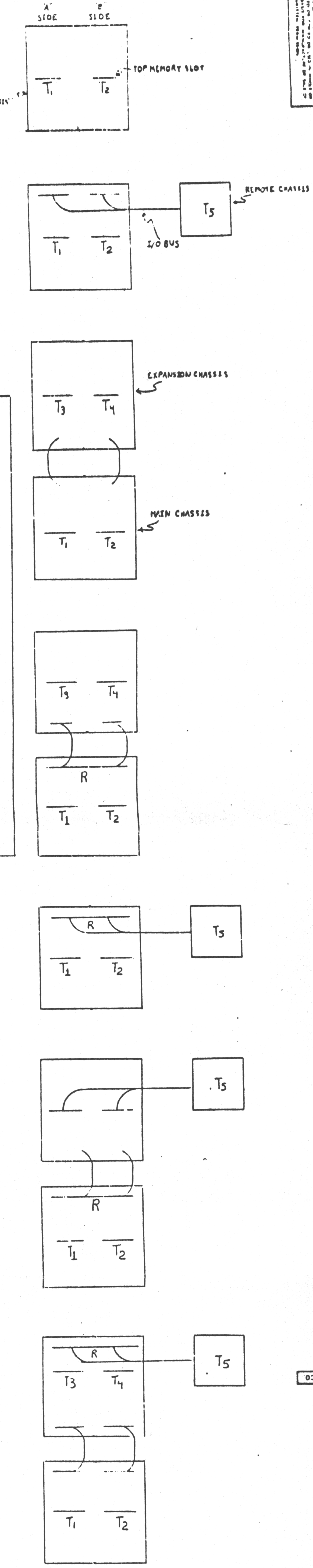

LEGEND TO TERMINATOR TABLE

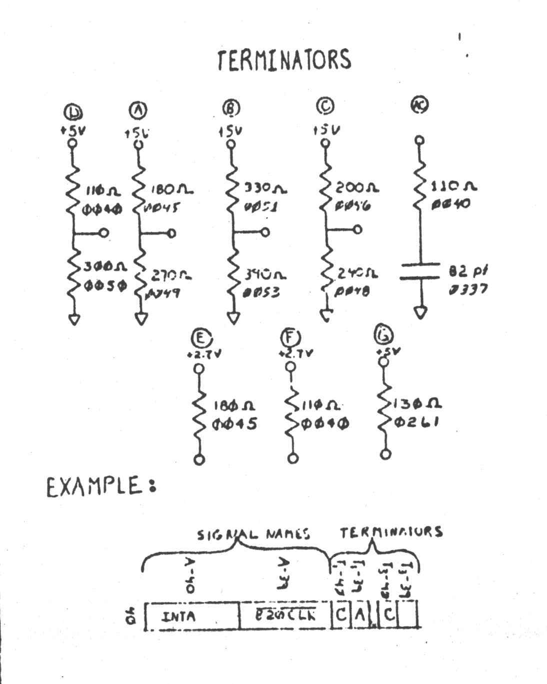

"A" SIDE

Pin	Signal	Signal	T_1	T_1	T_3	T_3
2	GND	GND				
4	+5V	+5V				
6	-5V	MEMWAIT		D		
8	HSCREQ	MEMOUT Ø				
10	+15V	MEMOUT 1				
12	MEMOUT 1Ø	MEMOUT 3				
14	GND	MEMOUT 2				
16	MEMOUT 14	MEMOUT 4				
18	MEMOUT 11	MEMOUT 5				
20	MEMOUT 15	MEMOUT 7				
22	MEMOUT 9	MEMOUT 6				
24	MEMOUT 13	MEMOUT 19				
26	MEMOUT 8	GND				
28	MEMOUT 12	MEMOUT 2Ø				
30	MEMOUT 17	MEMOUT 18				
32	MEMWAIT	MEMOUT 16	G			
34	GND	GND				
36	E40CLK	B10CLK		A		
38	MSKO	GND	C			F
40	INTA	B2ØCLK	C	AC		F
42	DATIB	GND	C			F
44	DATIA	BMEMCLK	C	AC		F
46	DS3	GND	C			F
48	DATOC	SMHZCLK	C			F
50	CLR	ENMBCLK	C			F
52	STRT	MEMORRY	C	D		F
54	DATIC	MODIS	C	A		F
56	DATOB	MEMSTART	C	D		F
58	DATOA	IR7	C			F
60	DCHA	IR6	C			F
62	DS4	IR5	C			F
64	DS5	IR2	C			F
66	DS2	GND	C			F
68	DS1	IR1	C			F
70	IORST	FIR3	C			F
72	DSØ	FIR4	C			F
74	IOPLS	IR8	C			F
76	FPCPU	IR9				
78	FPMEM	FPTB				
80	SELD	FPSKP1	B			E
82	SELB	CLEAR TO SEND	B			E
84	FPINST	ITTO				
86	FPB	TTOUT				
88	LCLK	TTIN				
90	5ØØ HZ	READERRUN				
92	PSCLK	FPABORT				
94		CLEAR TO SEND				
96	MEMOK	FAST DCH				
98	+5V	+5V				
100	GND	GND				

"B" SIDE

Pin	Signal	Signal	T_2	T_2	T_4	T_4
2	GND	GND				
4	+5V	+5V				
6		MEMIN 2Ø		A		
8	MEMIN 18	MEMIN 19	A	A		
10	MEMIN 16	MEMIN 17	A	A		
12	MEMIN Ø	FPSPARE 1	A			
14	MEMIN 1	FPSKP2	A			
16	MEMIN 2		A			
18	MEMIN 3	DCHMØ	A	B		E
20	MEMIN 7		A			
22	MEMIN 6	GND (7)	A			E
24	MEMIN 5	GPRESLT	A			
26	MEMIN 4	GPPRESET	A			
28	MEMIN 8		A			
30	MEMIN 9	INTR	A	B		E
32	MEMIN 1Ø		A			
34		DCHO		C		F
36	+5MEM	DCHR		B		E
38	15VB	DCHI		C		F
40	CONLOCK	NO (8)				E
42	MEMIN 11	RQENB	A	C		F
44	MEMIN 14	MEMIN 15	A	A		
46	+15V	MEMIN 13		A		
48	CONPL	MEMIN 12		A		
50	GND	CONLED				
52	CONRSTL	CONRSTA				
54	PWRFAIL	ONLED				
56	DATA 14	DATA 7	B	B	E	E
58	DATA 11	DATA 5	B	B	E	E
60	DATA 8	DATA 12	B	B	E	E
62	DATA Ø	DATA 4	B	B	E	E
64	DATA 13	DATA 9	B	B	E	E
66	DATA 15	DATA 1	B	B	E	E
68	GND					
70	+12 MEM					
72	+12 MEM	+12 MEM				
74	EXDCH	DATA 3	B	B	E	E
76	SPARE 2	DA[illegible]		B		E
78	SPARE 1	-11V				
80	GND	PWR OK		B		
82	DATA 2	-5V	B		E	
84	+15V	INHSEL		A		
86	ECCENB	PFPREQ		A		
88	+12V	+12V				
90	+12V	GND				
92	GND	-5MEM				
94	+5MEM	+5MEM				
96	MEM D	DATA 6		B		E
98	+5V	+5V				
100	GND	GND				

NOTES:

1. T_1 = TERMINATOR 'A' SIDE ØØ5-Ø15361
2. T_2 = TERMINATOR 'B' SIDE ØØ5-Ø12439
3. T_3 = TERMINATOR EXPANSION CHASSIS 'A' SIDE ØØ5-Ø11906
4. T_4 = TERMINATOR EXPANSION CHASSIS 'B' SIDE ØØ5-Ø13407
5. T_5 = TERMINATOR I/O BUS ØØ5-9067
6. R = BUS REPEATER
7. PIN 21 ON I/O SLOT 16 IS PWRFAIL
8. PIN 39 ON I/O SLOT 16 IS PWROK
9. SEE PAGE 2 FOR BACKPANE TERMINATIONS ON MEMOUT <Ø-2Ø>

REVISIONS				
REV	DESCRIPTION	DRFTG	APP BY	DATE
ØØ3 A38				

ITEM	QTY	DESCRIPTION	PART NO

DO NOT SCALE DRAWING. UNLESS OTHERWISE SPECIFIED USE D.G.C. SPECIFICATION 109-000028 FOR TOLERANCES AND WORKMANSHIP REQUIREMENTS

MATERIAL

FINISH

DRAWN R. CORS[illegible]

CHECKED [illegible]

ENGINEER

APPROVED

FIRST USED ON

SCALE

DATA GENERAL CORPORATION
SOUTHBORO, MASS. 01772

TITLE: DGC MACHINE BACKPANEL

CODE IDENT	SIZE	CODE	DRAWING NUMBER	REV
34984	D	ØØ1	ØØ15[illegible]	04