REV	DESCRIPTION	DRFTG	APP BY	DATE
00	RLSD PER ECO 2559			
01	REDRAW PER ECO 2596			
02	ECO 9932			
03	PER ECO 10464			
04	PER ECO 9933			

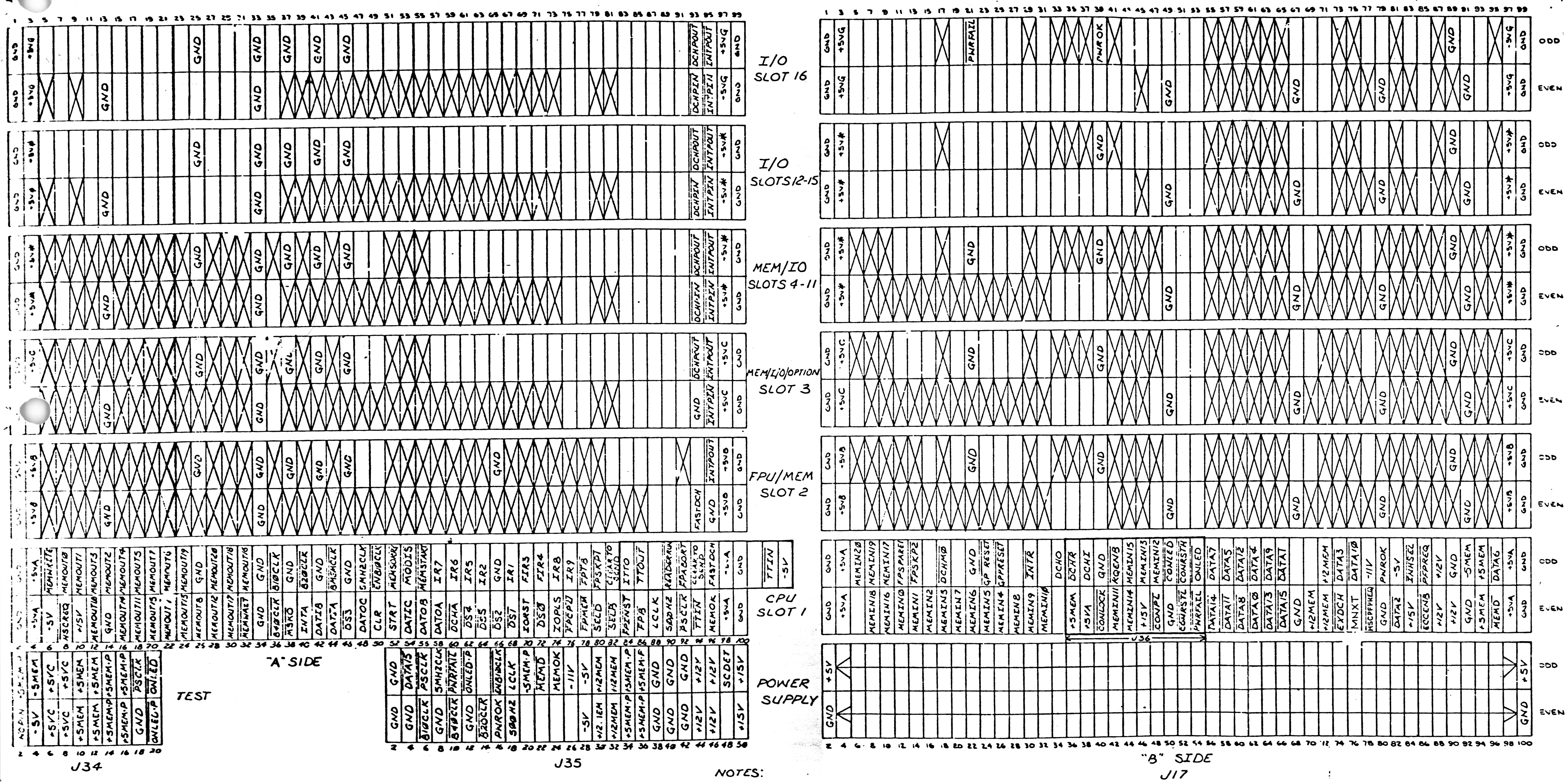

NOTES:

1. ☒ SIGNAL IS DAISY CHAINED TO SLOT BELOW.
2. ☐ NOT CONNECTED.
3. PRIORITY SIGNALS DCHPOUT & DCHPIN ARE CONNECTED ON SLOTS 3 THRU 16 SO THAT PIN A93 IS CONN. TO PIN A94 ON THE SLOT ABOVE.
4. PRIORITY SIGNALS INTPOUT & INTPIN ARE CONN. ON SLOTS 2 THRU 16 SO THAT PIN A95 IS CONN. TO PIN A96 ON THE SLOT ABOVE.
5. * +5VOLT POWER DISTRIBUTION SHOWN ON SHEET 2.

015000675
ARTWORK: 107-973
ARTWORK VS SCHEMATIC

REV	SCHEMATIC REV(S)
01	01,02,03

DATA GENERAL CORPORATION
SOUTHBORO, MASSACHUSETTS

TITLE: DGC MACHINE BACKPANEL

SHEET 1 OF 3

SIZE D — 001001563 — REV C4

THE INFORMATION AND SPECIFICATIONS HEREIN ARE THE PROPERTY OF DATA GENERAL CORP. AND SHALL NOT BE REPRODUCED OR COPIED IN WHOLE OR IN PART WITHOUT THE WRITTEN PERMISSION OF DATA GENERAL CORP.

REVISIONS				
REV	DESCRIPTION	DRFTG	APP BY	DATE

A30
D33

RESISTOR FENCE
(+5VA COMMON)
DD50119B7
180Ω RESISTORS
0045
R1

+5VA

- MEMOUT 0
- MEMOUT 1
- MEMOUT 3
- MEMOUT 10
- MEMOUT 2
- MEMOUT 4
- MEMOUT 14
- MEMOUT 5
- MEMOUT 11
- MEMOUT 7
- MEMOUT 15
- MEMOUT 6
- MEMOUT 9
- MEMOUT 19
- MEMOUT 13
- MEMOUT 8
- MEMOUT 20
- MEMOUT 12
- MEMOUT 18
- MEMOUT 17
- MEMOUT 16

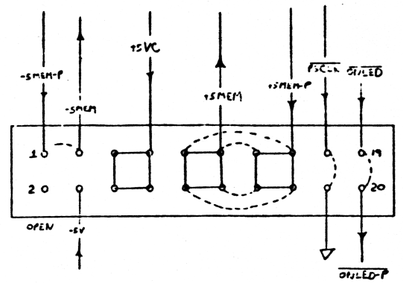

TEST PLUG
NORMAL POSITION

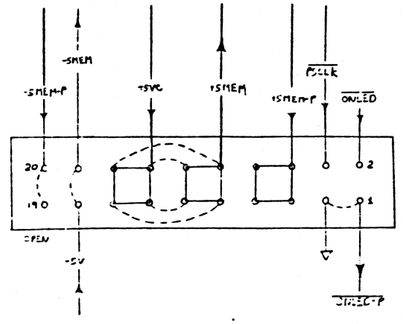

TEST PLUG
TEST POSITION

REED SWITCHES

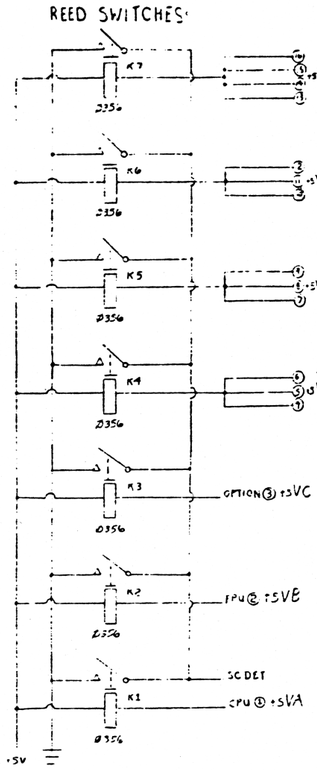

NOTES:

1. ● DENOTES JUMPER ON PLUG
2. TEST PLUG IS ROTATED 180° TO CONVERT FROM "NORMAL" TO "TEST."
3. ⓓ DENOTES SLOT ⓓ
4. ASSEMBLY NO. FOR RELAYS IS 004-005520
5. REED SWITCH CURRENT TRIP AT 22 AMP.

ITEM	QTY	DESCRIPTION	PART NO.

DO NOT SCALE DRAWING
UNLESS OTHERWISE SPECIFIED USE DGC SPECIFICATION 100-000028 FOR TOLERANCES AND WORKMANSHIP REQUIREMENTS

MATERIAL

FINISH

DRAWN	CORSI	7/6/78
CHECKED	[illegible]	[illegible]
ENGINEER		
APPROVED		
FIRST USED ON		

DATA GENERAL CORPORATION
SOUTHBORO, MASS. 01772

TITLE
DGC
BACKPANEL

SCALE	CODE IDENT	SIZE	CODE	DRAWING NUMBER	REV
	34984	D	001	001563	C4

SHEET 2 OF 3

SYSTEM CONFIGURATION OF TERMINATORS

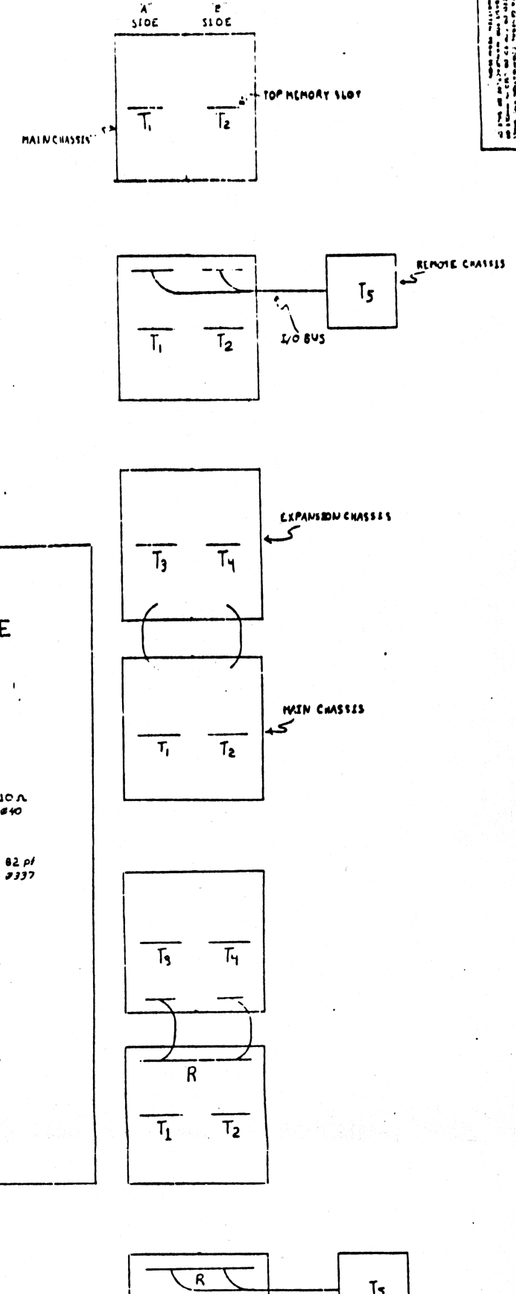

LEGEND TO TERMINATOR TABLE

TERMINATORS

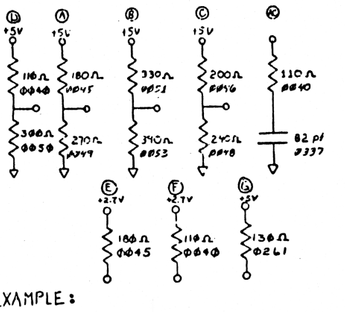

EXAMPLE:

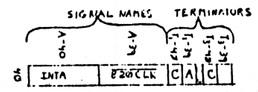

		T_1	T_3
GND	GND		
+5V	+5V		
+5V	MEMWRITE	D	
MSCLK	MEMOUT 0		
+15V	MEMOUT 1		
MEMOUT 10	MEMOUT 3		
GND	MEMOUT 2	D	
MEMOUT 14	MEMOUT 4		
MEMOUT 11	MEMOUT 5		
MEMOUT 15	MEMOUT 7		
MEMOUT 9	MEMOUT 6		
MEMOUT 13	MEMOUT 17		
MEMOUT 8	GND		
MEMOUT 12	MEMOUT 20		
MEMOUT 17	MEMOUT 16		
MEMWAIT	MEMOUT 16	G	
GND	GND		
EADCLR	BIOCLR	A	
MSRQ	GND	C	F
INTA	BSACLR	C	F
DATIB	GND	C	F
DATIA	BMEMCLR	C	F
DS3	GND	C	F
DATOC	SMMCLR	C	F
CLR	EMMBCLR	C	F
STRT	MEMDBRT	C	F
DATIC	MODIS	C	F
DATOB	MEMSTART	C	F
DATOA	IR7	C	F
DCHA	IR6	C	F
DS4	IR5	C	F
DS5	IR2	C	F
DS2	GND	C	F
DS1	IR1	C	F
IORST	FIR3	C	F
DS0	FIR9	C	F
IOPLS	IR8	C	F
FPCPU	IR9		
FPMEM	FPIR		
SELD	FPSLP1	B	E
SELB	CLEAR TO SEND	B	E
FPENBT	ITTO		
FPB	FTOUT		
LCLR	TTIG		
500 HZ	READERPUN		
RSCLK	FPAUXINT		
	CLEAR TO SEND		
MEM OK	FAST DCH		
+5V	+5V		
GND	GND		

"A" SIDE

		T_2	T_4
GND	GND		
+5V	+5V		
	MEMIN 20	A	
MEMIN 18	MEMIN 19	A	A
MEMIN 16	MEMIN 17	A	A
MEMIN 0	FPSPARE 1	A	
MEMIN 1	FPSPR2	A	
MEMIN 2		A	
MEMIN 3	DCHRQ	A	B E
MEMIN 7		A	
MEMIN 6	GND (A)	A	E
MEMIN 5	GPRESLT	A	
MEMIN 4	GPPRESET	A	
MEMIN 8		A	
MEMIN 4	INTR	A	B E
MEMIN 10		A	
	DCHO	C	F
15MEM	DCHR	B	E
15 VB	DCHI	C	F
CONLOCK	GND (B)		E
MEMIN 11	MSENB	A	C F
MEMIN 14	MEMIN 15	A	A
+15V	MEMIN 13	A	
CONPL	MEMIN 12	A	
GND	CONLED		
CONRSTL	CONRSTR		
PWRFAIL	CNLED		
DATA 14	DATA 7	B	B E E
DATA 11	DATA 5	B	B E E
DATA 8	DATA 12	B	B E E
DATA 2	DATA 4	B	B E E
DATA 13	DATA 9	B	B E E
DATA 15	DATA 1	B	B E E
GND			
+12 MEM			
+12 MEM	+12 MEM		
EPOCH	DATA 3	B	B E E
SPARE 2	DATA 6	B	E
SPARE 1	-11V		
GND	PWROK	B	E
DATA 2	-5V	B	E
+15V	INHSEL	A	
ECCENB	FPPREQ	A	
+12V	+12V		
+12V	GND		
GND	-5MEM		
+5MEM	+5MEM		
MEMD	DATA 0	B	E
+5V	+5V		
GND	GND		

"B" SIDE

NOTES:

1. T_1 = TERMINATOR 'A' SIDE 005-015361
2. T_2 = TERMINATOR 'B' SIDE 005-012439
3. T_3 = TERMINATOR EXPANSION CHASSIS 'A' SIDE 005-013706
4. T_4 = TERMINATOR EXPANSION CHASSIS 'B' SIDE 005-013707
5. T_5 = TERMINATOR I/O BUS 005-9067
6. R = BUS REPEATER
7. PIN 21 ON I/O SLOT 11 IS $\overline{\text{PWRFAIL}}$
8. PIN 39 ON I/O SLOT 11 IS PWROK
9. SEE PAGE 2 FOR BACKPANE TERMINATIONS ON MEMOUT <0-2>

REVISIONS			
REV	DESCRIPTION	DRTG	APP BY	DATE

DO NOT SCALE DRAWING
UNLESS OTHERWISE SPECIFIED
SEE ASCII SPECIFICATION
FOR ALL DIMENSIONS
AND TOLERANCES
SHOP REQUIREMENTS
MATERIAL
FINISH

ITEM	QTY	DESCRIPTION	PART NO

DRAWN R.C.S. 5-5-76
CHECKED E.J.S. 5-5-76
ENGINEER
APPROVED
FIRST USED ON

SCALE
SCALE/SIZE 3498A
SIZE D
CODE 60151
DRAWING NUMBER 60151-3
REV 04
SHEET 3 OF 3

DGC MACHINE BACKPANEL
TITLE

DATA GENERAL CORPORATION
SOUTHBORO, MASS. 01772

033 A3B