THE DRAWINGS AND SPECIFICATIONS, HEREIN, ARE THE PROPERTY OF DATA GENERAL CORPORATION AND SHALL NOT BE REPRODUCED OR COPIED OR USED IN WHOLE OR IN PART AS THE BASIS FOR MANUFACTURE OR SALE OF ITEMS WITHOUT WRITTEN PERMISSION

REVISIONS				
REV.	DESCRIPTION	DRFTG	APP BY	DATE
01	ECO 269	RNK		8-11-71
02	ECO 294	RNK		8-11-71
03	ECO 323	RNK		8-11-71
04	ECO 325	RNK		8-11-71
05	ECO 390	RNK		8-11-71
06	ECO 481	RNK		8-11-71
07	ECO 725	[illegible]		3/72
08	ECO 768	[illegible]		3/72
09	ECO 785	[illegible]		3/72

NOTE:- R8 RESISTORS SELECTED AT TEST LEVEL.

NOTE:- FOLLOWING COMPONENTS ARE NOT INSTALLED ON P.C. BOARD AS SHOWN. R1, R188, C5, C124, CR88, VR2, J1

NOTE: ALL CAPACITORS ARE IN MICROFARADS, AND ALL RESISTORS ARE IN OHMS, 1/4 WATT, WITH 5% TOLERANCE UNLESS OTHERWISE SPECIFIED.

QTY.	DESCRIPTION	PART NO
DRAWN	CAREY JOHNSON 9/21/70	
CHECKED		
ENGINEER		
APPROVED		
FIRST USED ON	107-000073-02	
MATERIAL		
FINISH		
SCALE		

UNLESS OTHERWISE SPECIFIED— DIMENSIONS ARE IN INCHES. TOLERANCES ON FRACTIONS DECIMALS ANGLES ± XX ± XXX ± PARTS TO BE FREE FROM BURRS BREAK ALL EDGES .010. UNLESS OTHERWISE SPECIFIED - ALL MACH. SURFACES

DATA GENERAL CORPORATION
SOUTHBORO, MASSACHUSETTS 01772

TITLE
4K MEMORY
MA & MB REGISTER & CONTROL
8103 (NOVA 1200)

SIZE	CODE	DRAWING NUMBER	REV
D	001	000103	09

SHEET 1 OF 4

Change 1

THIS DRAWING AND SPECIFICATIONS, THEREIN, ARE THE PROPERTY OF DATA GENERAL CORPORATION AND SHALL NOT BE REPRODUCED OR COPIED OR USED IN WHOLE OR IN PART AS THE BASIS FOR MANUFACTURE OR SALE OF ITEMS WITHOUT WRITTEN PERMISSION

REVISIONS				
REV.	DESCRIPTION	DRFTG	APP BY	DATE

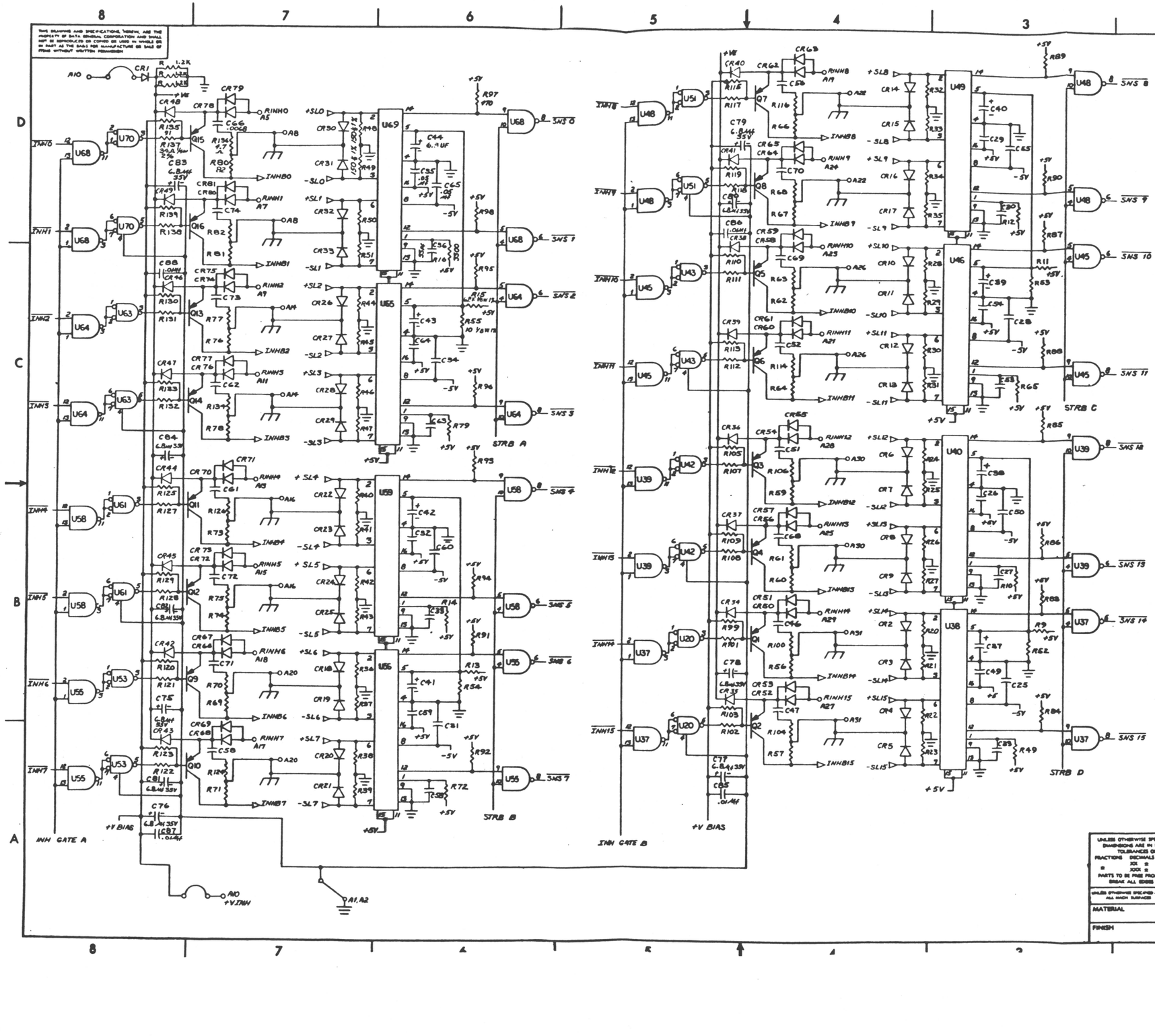

UNLESS OTHERWISE SPECIFIED— DIMENSIONS ARE IN INCHES TOLERANCES ON FRACTIONS DECIMALS ANGLES ± XX ± .XXX ± PARTS TO BE FREE FROM BURRS BREAK ALL EDGES .010	QTY.	DESCRIPTION / PART NO.
	DRAWN CHET JOHNSON 8/6/70	DATA GENERAL CORPORATION SOUTHBORO, MASSACHUSETTS 01772
	CHECKED	TITLE: 4K MEMORY SENSE & INHIBIT 8103 (NOVA 1200)
	ENGINEER	
	APPROVED	
UNLESS OTHERWISE SPECIFIED - ALL FINISH SURFACES	FIRST USED ON 107-000073-02	
MATERIAL		SIZE D · CODE 001 · DRAWING NUMBER 000103 · REV 09
FINISH	SCALE	SHEET 2 OF 4

Change 1

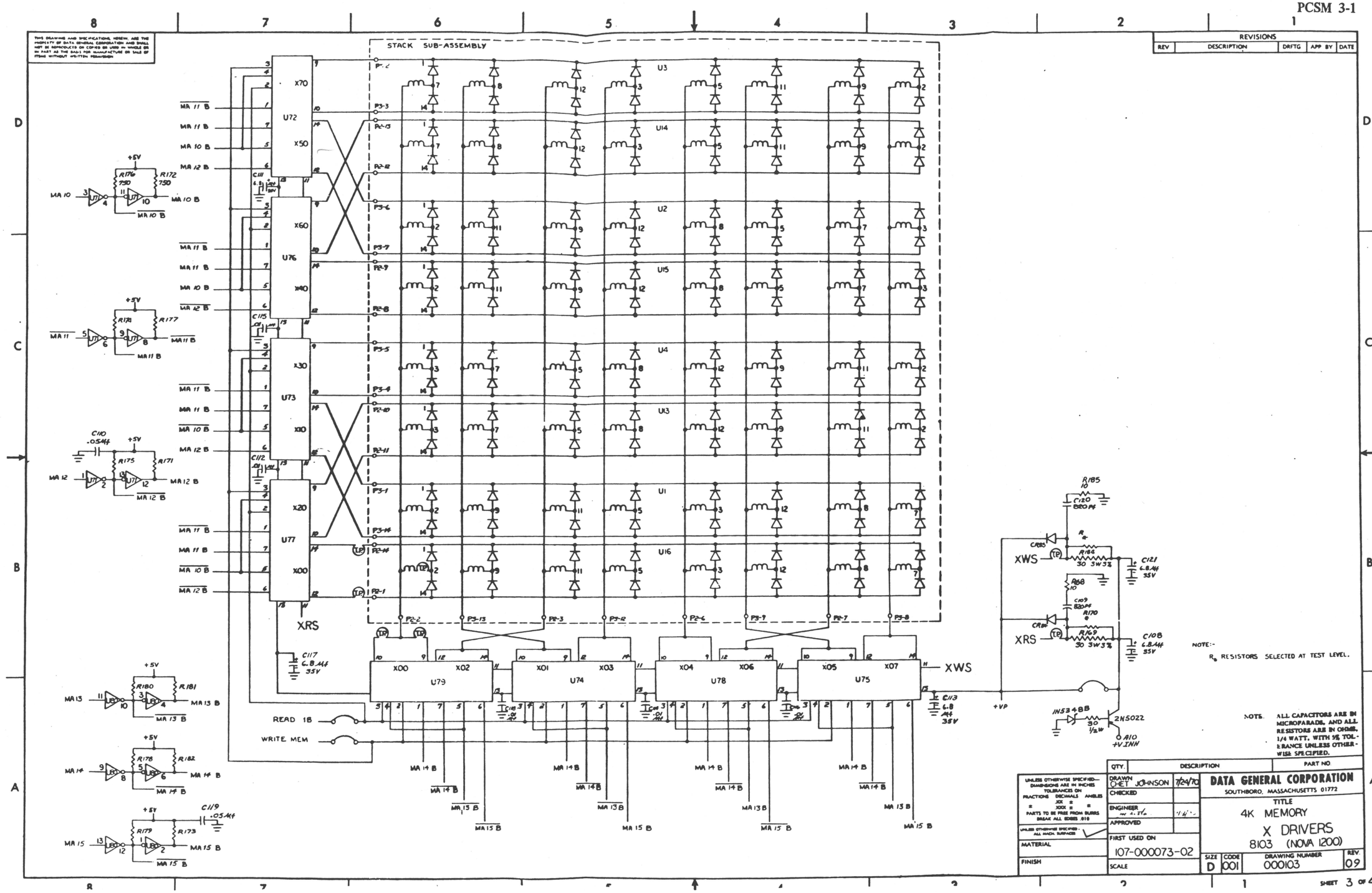
STACK SUB-ASSEMBLY
U72
U76
U73
U77
U79
U74
U78
U75
U3
U14
U2
U15
U4
U13
U1
U16
XRS
XWS
READ 1B
WRITE MEM
+VP
NOTE:-
R_s RESISTORS SELECTED AT TEST LEVEL.
NOTE. ALL CAPACITORS ARE IN MICROFARADS, AND ALL RESISTORS ARE IN OHMS, 1/4 WATT, WITH 5% TOLERANCE UNLESS OTHERWISE SPECIFIED.
REVISIONS
REV
DESCRIPTION
DRFTG
APP BY
DATE
QTY.
DESCRIPTION
PART NO.
DRAWN CHET JOHNSON 7/24/70
CHECKED
ENGINEER
APPROVED
FIRST USED ON
107-000073-02
SCALE
MATERIAL
FINISH
DATA GENERAL CORPORATION
SOUTHBORO, MASSACHUSETTS 01772
TITLE
4K MEMORY
X DRIVERS
8103 (NOVA 1200)
SIZE D
CODE 001
DRAWING NUMBER 000103
REV. 09
SHEET 3 OF 4

THIS DRAWING AND SPECIFICATIONS, HEREIN, ARE THE PROPERTY OF DATA GENERAL CORPORATION AND SHALL NOT BE REPRODUCED OR COPIED OR USED IN WHOLE OR IN PART AS THE BASIS FOR MANUFACTURE OR SALE OF ITEMS WITHOUT WRITTEN PERMISSION.
REVISIONS
REV. DESCRIPTION DRFTG. APP BY DATE
STACK SUB-ASSEMBLY
U54 Y70 Y50
U62 Y60 Y40
U52 Y30 Y10
U66 Y20 Y00
U10 U7 U8 U9 U12 U5 U6 U11
U60 Y00 Y02
U50 Y01 Y03
U57 Y04 Y06
U47 Y05 Y07
YRS
YWS
WRITE MEM
READ 2B
MA 4 B
MA 5 B
MA 6 B
MA 7 B
MA 8 B
MA 9 B
+5V
C105 .05Mf
C96 .05Mf
C104 6.8Mf 35V
C97 6.8 Mf 35V
R149 10
C94 820PF
CR82
R151
R150 30 3W 3%
C95 6.8Mf 35V
R166 10
C107 820PF
CR83
R164
R165 30 3W 3%
C106 6.8Mf 35V
+VP
+VINHP
+V INH
NOTE:- Rx RESISTORS SELECTED AT TEST LEVEL.
NOTE: ALL CAPACITORS ARE IN MICROFARADS, AND ALL RESISTORS ARE IN OHMS, 1/4 WATT, WITH 5% TOLERANCE UNLESS OTHERWISE SPECIFIED.
QTY. DESCRIPTION PART NO
DRAWN CHET JOHNSON 7/24/70
CHECKED
ENGINEER
APPROVED
FIRST USED ON 107-000073-02
SCALE
MATERIAL
FINISH
DATA GENERAL CORPORATION
SOUTHBORO, MASSACHUSETTS 01772
TITLE
4K MEMORY
Y DRIVERS
8103 (NOVA 1200)
SIZE D CODE 001 DRAWING NUMBER 000103 REV 09
SHEET 4 OF 4