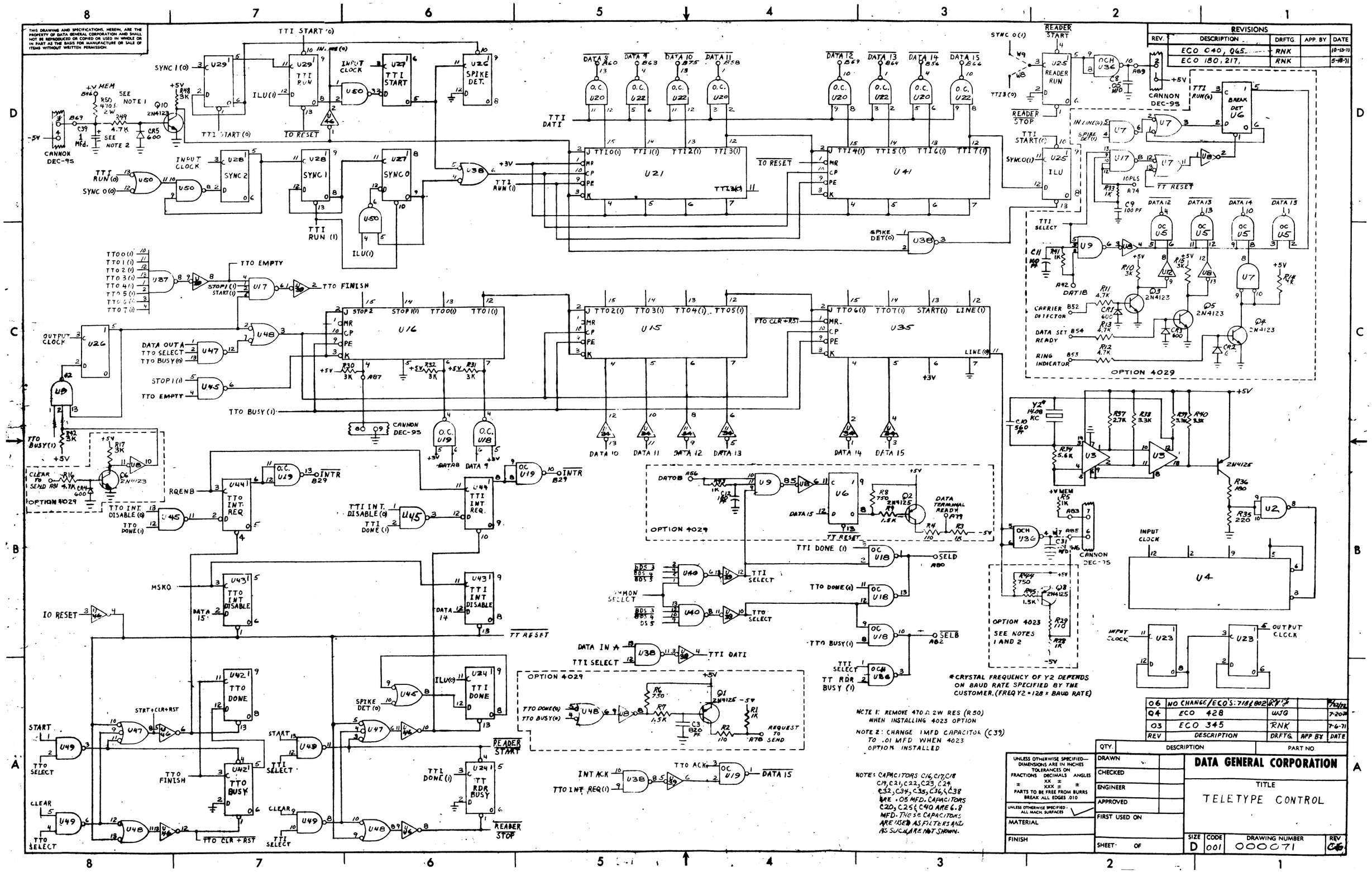

THIS DRAWING AND SPECIFICATIONS, HEREIN, ARE THE PROPERTY OF DATA GENERAL CORPORATION AND SHALL NOT BE REPRODUCED OR COPIED OR USED IN WHOLE OR IN PART AS THE BASIS FOR MANUFACTURE OR SALE OF ITEMS WITHOUT WRITTEN PERMISSION.
REVISIONS
REV. DESCRIPTION DRFTG. APP. BY DATE
ECO C40, Q65 RNK 10-13-70
ECO 180, 217, RNK 5-18-71
OPTION 4029
OPTION 4023
SEE NOTES 1 AND 2
*CRYSTAL FREQUENCY OF Y2 DEPENDS ON BAUD RATE SPECIFIED BY THE CUSTOMER. (FREQ Y2 = 128 x BAUD RATE)
NOTE 1: REMOVE 470 Ω 2W RES (R50) WHEN INSTALLING 4023 OPTION
NOTE 2: CHANGE 1MFD CAPACITOR (C39) TO .01 MFD WHEN 4023 OPTION INSTALLED
NOTE: CAPACITORS C16, C17, C18 C19, C21, C22, C23, C24 C32, C34, C35, C36, & C38 ARE .05 MFD. CAPACITORS C20, C25 & C40 ARE 6.8 MFD. THESE CAPACITORS ARE USED AS FILTERS AND AS SUCH ARE NOT SHOWN.
06 NO CHANGE/ECO'S: 718 & 802
04 ECO 428 WJG 7-20-71
03 ECO 345 RNK 7-6-71
REV DESCRIPTION DRFTG. APP BY DATE
QTY. DESCRIPTION PART NO.
UNLESS OTHERWISE SPECIFIED— DIMENSIONS ARE IN INCHES TOLERANCES ON FRACTIONS DECIMALS ANGLES ± XX ± XXX ± ± PARTS TO BE FREE FROM BURRS BREAK ALL EDGES .010
UNLESS OTHERWISE SPECIFIED - ALL MACH. SURFACES
MATERIAL
FINISH
DRAWN
CHECKED
ENGINEER
APPROVED
FIRST USED ON
SHEET OF
DATA GENERAL CORPORATION
TITLE
TELETYPE CONTROL
SIZE D CODE 001 DRAWING NUMBER 000071 REV C6