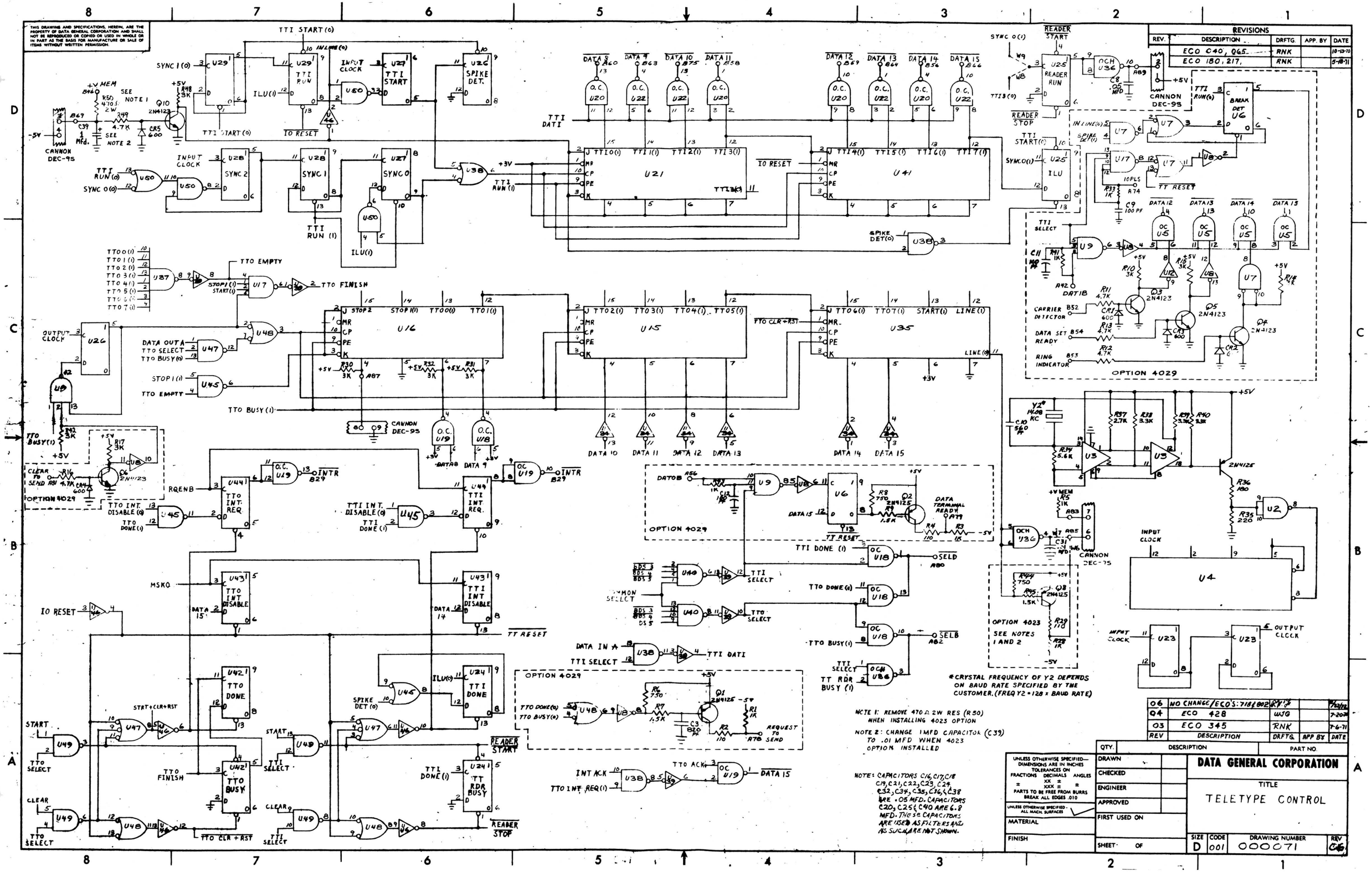

REV.	DESCRIPTION	DRFTG.	APP. BY	DATE
	ECO 040, 065	RNK		10-13-70
	ECO 180, 217,	RNK		5-18-71

REV	DESCRIPTION	DRFTG.	APP BY	DATE
06	NO CHANGE/ECO'S: 718 & 802			
04	ECO 428	WJG		7-20-71
03	ECO 345	RNK		7-6-71

QTY.	DESCRIPTION	PART NO.

UNLESS OTHERWISE SPECIFIED— DIMENSIONS ARE IN INCHES TOLERANCES ON FRACTIONS DECIMALS ANGLES ± XX ± XXX ± PARTS TO BE FREE FROM BURRS BREAK ALL EDGES .010

UNLESS OTHERWISE SPECIFIED - ALL MACH. SURFACES

MATERIAL

FINISH

DRAWN

CHECKED

ENGINEER

APPROVED

FIRST USED ON

SHEET OF

DATA GENERAL CORPORATION

TITLE

TELETYPE CONTROL

SIZE	CODE	DRAWING NUMBER	REV
D	001	000071	C6